PART CODE	MATERIAL	SURFACE PROTECTION
I	ALUMINIUM ALLOY	CHROMATED
II	STEEL	PASSIVATED
III	STEEL	PAINTED
IV	PLASTIC	NO TREATMENT
V	BRASS	SILVER COATING

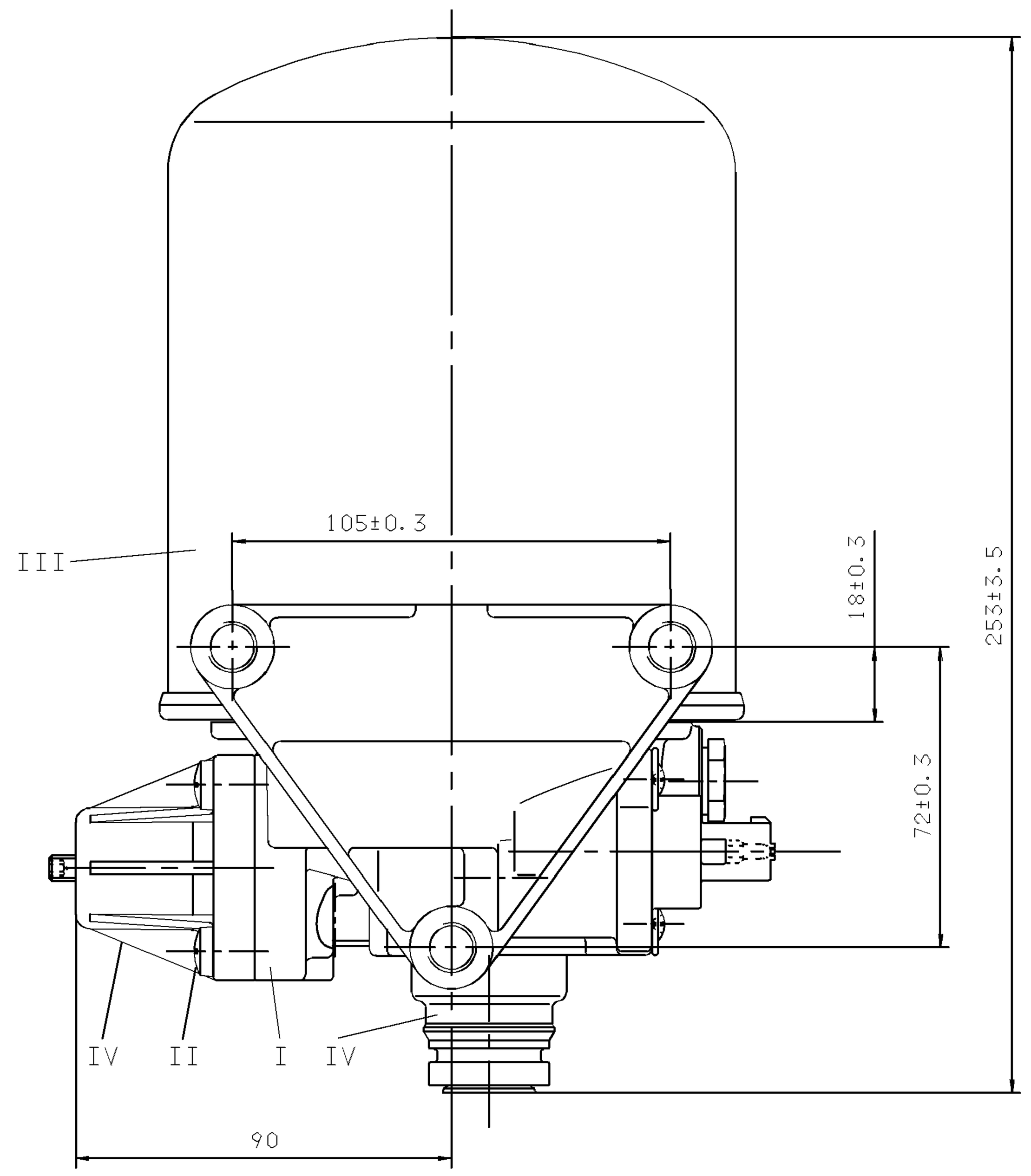

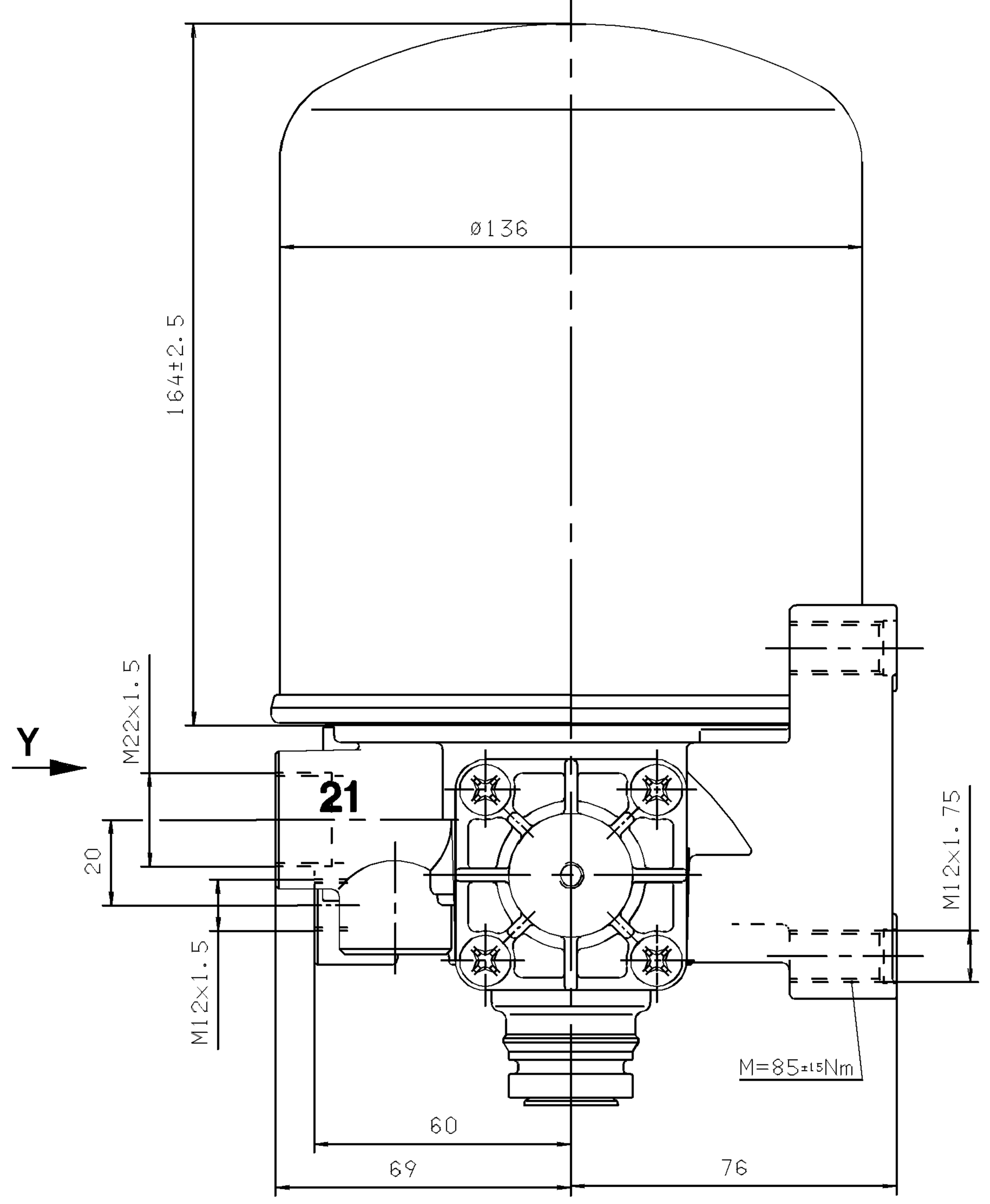

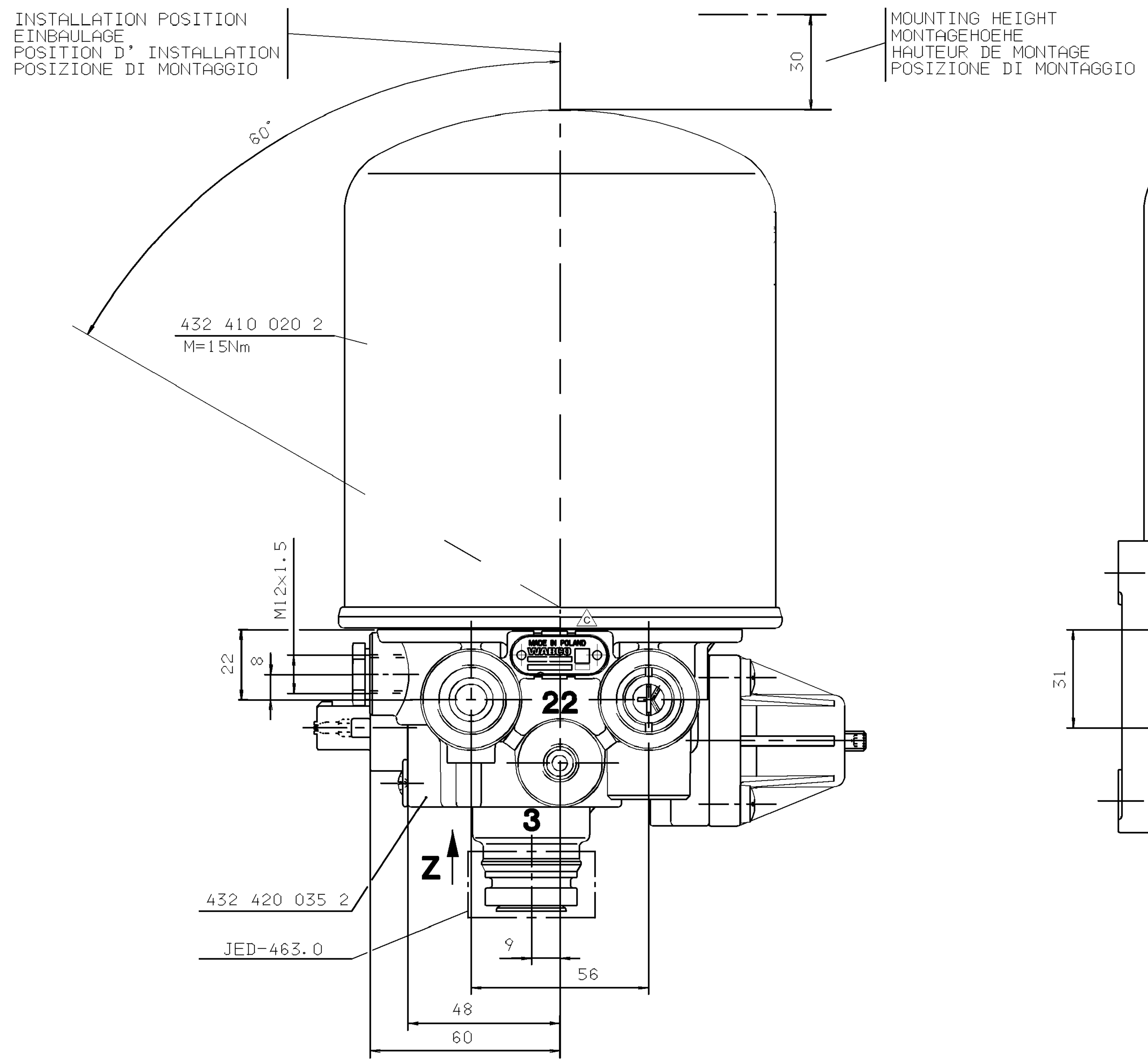

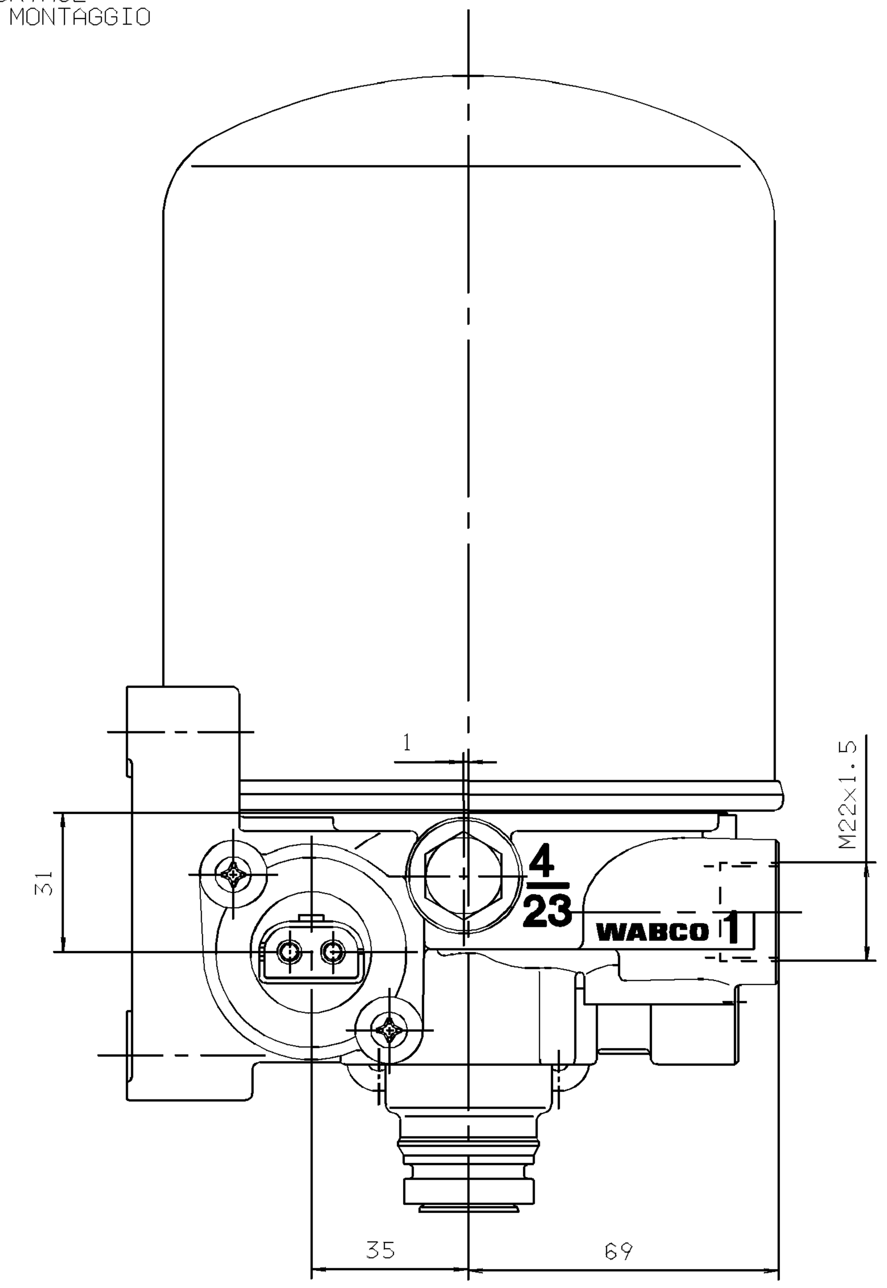

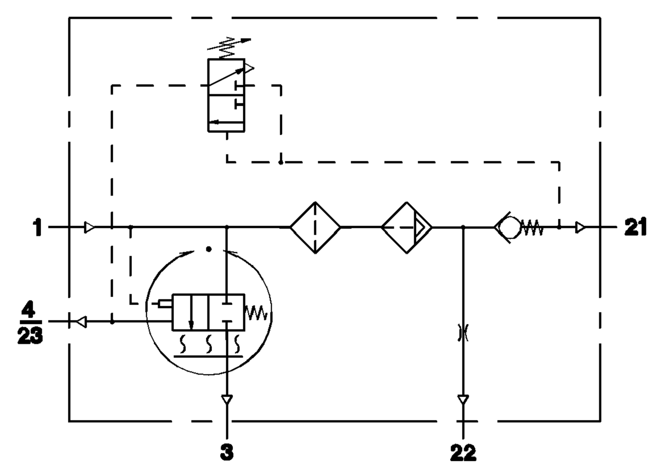

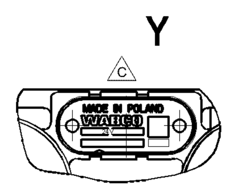

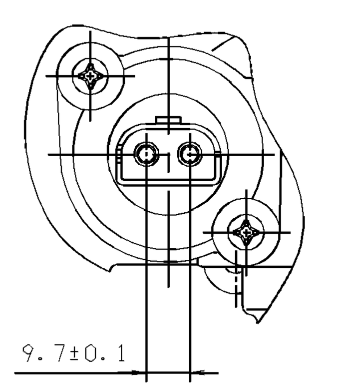

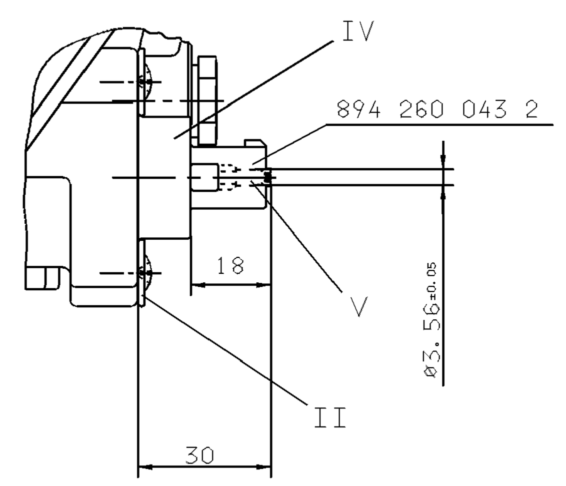

1 FROM THE COMPRESSOR
VOM KOMPRESSOR
PROVENANT DU COMPRESSEUR
PROVENIENTE DEL COMPRESSORE

21 TO THE RESERVOIRS
ZU DEN LUFTBEHAELTERN
AUX RESERVOIR
AL SERBATOII PER

22 TO THE RESERVOIRS FOR REGENERATED AIR
ZUM REGENERATIONS-LUFTBEHAELTER
AUX RESERVOIRS D' AIR REGENERE
AL SERBATOII PER L' ARIA RIGENERATA

4/23 TO THE COMPRESSOR
ZUM KOMPRESSOR
AU COMPRESSEUR
AL COMPRESSORE

3 EXHAUST FOR COMPRESSED AIR
ENTLUEFTUNG FUER DRUCKLUFT
ECHAPPEMENT POUR AIR COMPRIME
SCARIO PER ARIA COMPRESSA

THERMAL RANGE OF CONTINUOUS APPLICATION:
THERMISCHER DAUERANWENDUNGSBEREICH:
PLAGE DE TEMPERATURE EN UTILISATION CONTINUE: -40°C....+65°C
COMPO DI APPLICAZIONE CONTINUA:

RESISTANCE TO HEAT:
WAERMEBESTAENDIGKEIT:
RESISTANCE A LA CHALEUR: MAX.+80°C
RESISTANZA AL CALORE:

MEDIUM: COMPRESSED AIR
MEDIUM: DRUCKLUFT
FLUIDE: AIR COMPRIME
FLUIDO: ARIA COMPRESSA

WORKING PRESSURE:
BETRIEBSDRUCK:
PRESSION DE SERVICE: p_e max.=13bar
PRESSIONE D' ESERCIZIO:

INSTALLATION POSITION AS DRAWN
EINBAULAGE WIE GEZEICHNET
POSITION D' INSTALLATION SUIVANT DESSIN
POSIZIONE DI MONTAGGIO COME DISEGNATO

MAX. PERMISSIBLE ACCLERATION:
MAX. ZULAESSIGE BESCHLEUNIGUNG: ±10×g
ACCELERATION MAX. ADMISSIBLE:
ACCELERAZIONE MAX. AMMESSA:

MAX. PERMISSIBLE FREQUENCY
MAX. ZULAESSIGE FREQUENZ
MAX. ADMISSIBLE FREQUENZE 50 Hz
MAX. AMMISSIBLE FREQUENZA

TORQUE FOR CONNECTIONS:
ANZUGSMOMENT FUER EINSCHRAUBSTUTZEN: M12×1.5: $M_{max.}$ = 21 Nm
COUPLE DE SERRAGE DES RACCORDS: M22×1.5: $M_{max.}$ = 53 Nm
COPPIA DI SERRAGGIO DEI RACCORDI:

HEATING:
HEIZUNG:
CHAUFFAGE:
RISCALDAMENTO:

CUT-IN TEMPERATURE
EINSCHALT-TEMPERATUR
TEMPERATURE DE FERMETURE 7°±6°C
TEMPERATURA DI CHIUSURA

CUT-OFF TEMPERATURE
AUSSCHALT-TEMPERATUR
TEMPERATURE DE MISE 29.5°±3°C
TEMPERATURA DI APERTURA

BATTERY VOLTAGE:
BATTERIESPANNUNG:
TENSION DE BATTERIE: $24^{+4.8}_{-2.4}$ V DC
TENSIONE DI BATTERIA:

POWER:
LEISTUNG:
PUISSANCE: 100 W
POTENZA:

WITHOUT CURRENT
STROMLOS
SANS COURANT
SENZA CORRENTE

95^{0}_{-5} W WITH / BEI / AVEC / CON 24 V DC

APPLIED ACROSS THE HEATER CONTACTS
DIREKT AN DEN HEIZUNGSKONTAKTEN
APPLIQUEE SUR LES CONTACTS DE CHAUFFAGE
APPLICATA SULLE CONTATTI DI RISCALDAMENTO

GOVERNOR
GOVERNOR
PILOTAGE
COMANDO

CUT OUT PRESSURE
ABSCHALTDRUCK
PRESSION DE DECL 12 ±0.2 bar
PRESSIONE D'APERT

OPERATING RANGE
SCHALTSPANNE
PLAGE DE REGULATION $0.9^{+0.7}_{0}$ bar
GAMMA DI REGOLAZIONE

SAFETY PRESSURE OF THE PURGE VALVE AT
SICHERHEITSDRUCK DES LEERLAUFVENTILES BEI V_N = 100 dm^3: ≤ 19 bar

General Specification: ISO 8015, JED-334-1, Size ISO 14405 LP
Further Technical Data: Product Specification
Doc. Code: 035 | Sheet: 1 To 4

General Tolerances JED-261

Class 1)	≤ 50	> 50 ≤ 180	> 180 ≤ 400	> 400	
Fine	±0.5	±1	±1.5	±2	
Medium X	±1	±2	±3	±4	±3°
Coarse	±2	±3.5	±5	±6.5	

Tapped Holes acc. JED-152
1) Tolerance Class Applied Crossmarked

Copyright WABCO®

	Date	Signature
Drawn	2022-07-19	Kurzynski
Checked	2022-07-19	Kostrzewa

Dimensions in mm

WABCO

AIR DRYER
LUFTTROCKNER
DESSICATEUR D' AIR
ESSICATORE D' ARIA

Mass	Scale	Material No.	Doc.Code	Language	Sheet
4.23 kg	1:1	432 410 087 0	005	ML	1/1

Date of first issue: 2001-07-12

Size	CAD System	ECN-No.	Revision	Techn. Resp.	Replacement for
A 0	TIF	510690	3 x C	5050	

Toute Communication ou reproduction de ce document, toute exploitation ou communication de son contenu sont interdites, sauf autorisation expresse. Tout manquement à cette règle constitue un abus evident et expose son auteur au versement de dommages et interets. Tous droits de propriete industrielle reserves, notamment en matiere de brevets et de modeles.
Weitergabe sowie Vervielfaeltigung dieser Unterlage, Verwertung und Mitteilung ihres Inhalts nicht gestattet, soweit nicht ausdruecklich zugestanden. Zuwiderhandlungen stellen einen offensichtlichen Missbrauch dar und verpflichten zu Schadenersatz. Alle Rechte fuer den Fall der Patenterteilung oder Gebrauchsmuster-Eintragung vorbehalten.
Non e permesso consegnare a terzi o riprodurre questo documento, ne utilizzarne il contenuto o renderlo comunque noto a terzi senza autorizzazione esplicita. Ogni infrazione costituira un evidente abuso e comportera il risarcimento dei danni subiti. E'fatta riserva di tutti i diritti derivanti da brevetti o modelli.
Copying of this document and giving it to others and the use or communication of the contents thereof, are forbidden without express authority. Contravention of this restriction will constitute an evident abuse and result in a liability to the payment of damages. All rights are reserved in the event of the grant of patent or registration of a utility model or design. This document is the subject of copyright.