SURFACE PROTECTION OBERFLAECHENSCHUTZ PROTECTION DE SURFACE PROTEZIONE SUPERFICIALE	
I	JED-259
II	JED-256-4
III	JED-471 WHITE/WEISS
IV	JED-CLASS KLASSE 25
V	JED-240-5

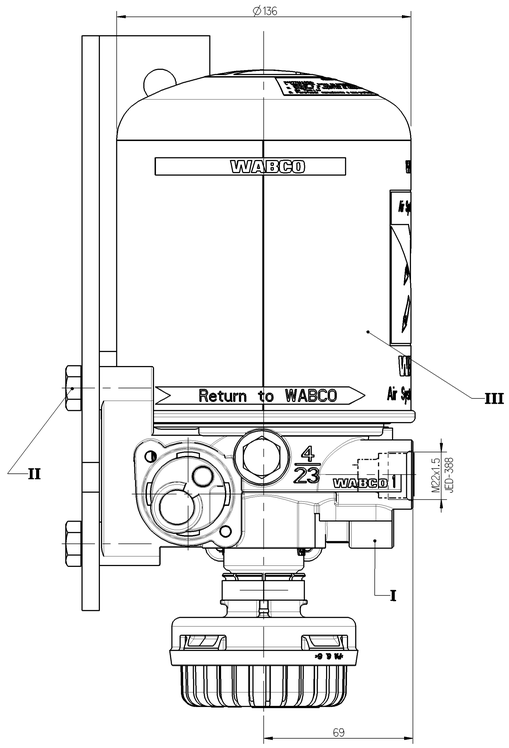

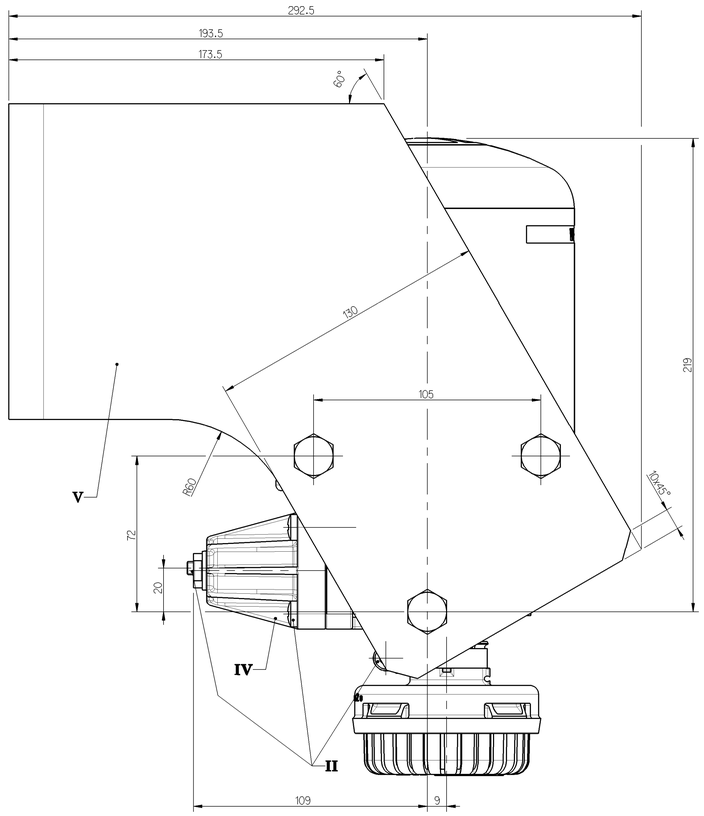

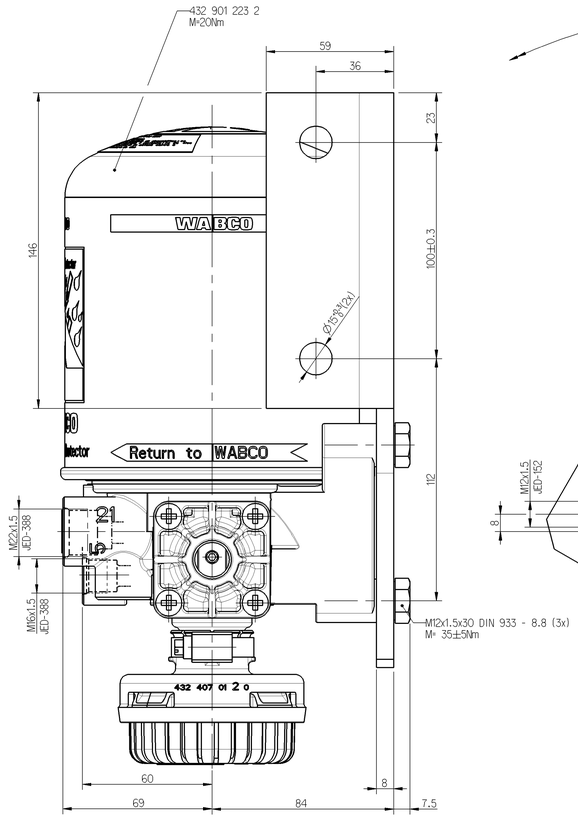

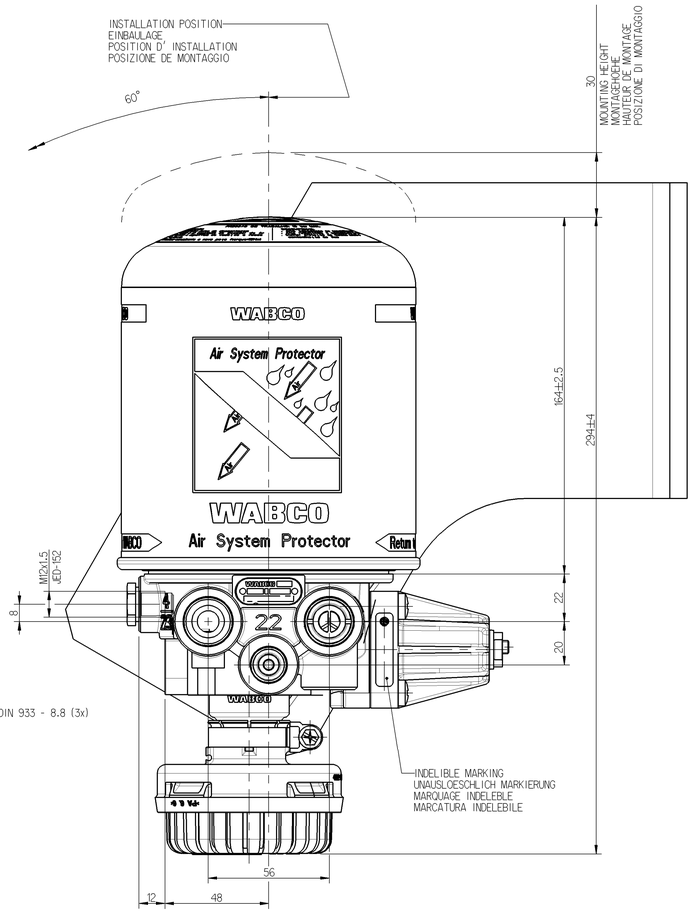

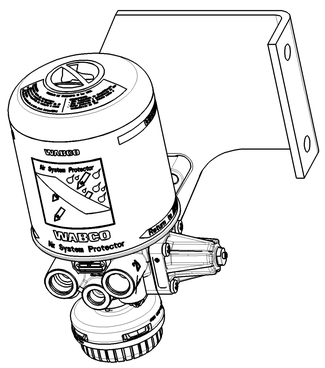

1:2

1	FROM THE COMPRESSOR VOM KOMPRESSOR PROVENANT DU COMPRESSEUR PROVENIENTE DEL COMPRESSORE	THERMAL RANGE OF CONTINUOUS APPLICATION THERMISCHER DAUERANWENDUNGSBEREICH PLAGE DE TEMPERATURE EN UTILISATION CONTINUE[1] COMPO DI APPLICAZIONE CONTINUA	-40°C...+65°C
21	TO THE RESERVOIRS ZU DEN LUFTBEHAELTERN AUX. RESERVOIR AL SERBATOI I PER	RESISTANCE TO HEAT WAERMEBESTAENDIGKEIT RESISTANCE A LA CHALEUR[1] RESISTANZA AL CALORE	MAX. +80°C
22	TO THE RESERVOIRS FOR REGENERATED AIR ZUM REGENERATIONS-LUFTBEHAELTER AUX RESERVOIRS D'AIR REGENERE AL SERBATOII PER L'ARIA RIGENERATA	MEDIUM: COMPRESSED AIR MEDIUM: DRUCKLUFT FLUIDE: AIR COMPRIME FLUIDO: ARIA COMPRESSA	
4/23	TO THE COMPRESSOR ZUM KOMPRESSOR AU COMPRESSEUR AL COMPRESSORE	WORKING PRESSURE BETRIEBSDRUCK PRESSION DE SERVICE[1] PRESSIONE D'ESERCIZIO	p_eMAX. = 13bar
3	EXHAUST FOR COMPRESSED AIR ENTLUEFTUNG FUER DRUCKLUFT ECHAPPEMENT POUR AIR COMPRIME SCARIO PER ARIA COMPRESSA	MAX.PERMISSIBLEFREQUENCY MAX. ZULAESSIGE FREQUENZ MAX. ADMISSIBLE FREQUENCE[1] MAX. AMMISSIBLE FREQUENZA	50 Hz
		TORQUE FOR CONNECTIONS ANZUGSMOMENT FUER EINSCHRAUBSTUTZEN COUPLE DE SERRAGE DES RACCORDS COPPIA DI SERRAGIO DEI RACCORDI	M12x1.5 M max. 21Nm M16x1.5 M max. 34Nm M22x1.5 M max. 53Nm

COMBINED UNLOADER
DRUCKREGLER
REGULATEUR DE PRESSION[1]
GRUPPO DI REGULAZIONE

CUT OUT PRESSURE
ABSCHALTDRUCK
PRESSION D'OUVERTURE[1]
PRESSIONE D'APERATURA
Ⓒ $9.0^{+0.2}_{-0.2}$ bar

OPERATING RANGE
SCHALTSPANNE
PLAGE DE REGULATION[1]
GAMME DI REGULAZIONE
Ⓒ $0.7^{+0.6}_{0}$ bar

MAX. PERMISSIBLE ACCELERATION
MAX. ZULAESSIGE BESCHLEUNIGUNG
ACCELERATION MAX. ADMISSIBLE : ±10Xg
ACCELERATIONE MAX. AMMESSA

INSTALLATION POSITION AS DRAW
EINBAULAGE WIE GEZEICHNET
POSITION D'INSTALLATION SUIVANT DESSIN
POSIZIONE DI MONTAGGIO COME DISEGNATO

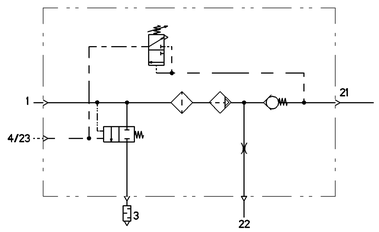

COMBINED UNLOADER : CUT OUT PRESSURE DRUCKREGLER : ABSCHALTDRUCK REGULATEUR DE PRESS. : PRESSION DE DECL. GRUPPO DE REGULAZIONE: PRESSIONE D'APERT	DYNAMIC PRESSURE OF THE SAFETY VALVE STAUDRUCK DES SICHERHEITSVENTILES PRESSION DYNAMIQUE DU SOUPAPE DE SECURITE PRESSIONE DINAMICA DELLA VALVOLA DI SICUREZZA
(bar)	(bar)
7.1 ÷ 8.5	≤ 14.5 (BEI Vn= 100cm³/min.)
8.6 ÷ 10.0	≤ 16.0 (BEI Vn= 100dc³/min.)

General Specifications: JED-334-0					
Further Technical Data:					
Doc. Code:		Sheet- To			
General Tolerances JED-261					
Class 1)	Range of Nominal Dimensions (in mm) ≤ 50	> 50 ≤ 180	> 180 ≤ 400	> 400	
Fine	0.5	1.0	1.5	2.0	±3°
Medium X	1.0	2.0	3.0	4.0	
Coarse	2.0	3.5	5.0	6.5	
Tapped Holes acc. JED-152					
1) Tolerance Class Applied Crossmarked					

Copyright WABCO®

WABCO

AIR DRYER
LUFTTROCKNER
DESSICATORE D'ARIA
ESSICATORE D'ARIA

Date	Signature
Drawn 2009-11-06	Oliveira
Checked 2009-11-09	Lutar
Expert Copiewska	

Mass	Scale	Material No.	Date of first issue: 2006-11-07
7.15 kg	1:1 (1:2)	432 410 132 0	Doc.Code: 005 / Language: ML / Sheet: 1/1
Size A 0	CAD System Pro/E	ECN No. 151539 / Revision 2x C / Techn. Resp. 5052	Replacement for

100mm

Die Gemeinte Verwendung und Mitteilung dieser Unterlage, sowie deren Inhalt ist untersagt soweit nicht ausdrücklich zugestanden. Zuwiderhandlungen verpflichten zu Schadensersatz. Alle Rechte für den Fall der Patenterteilung oder Gebrauchsmustereintragung vorbehalten.

The promise contained in this document, the distribution and communication of its contents, and the use of the information contained therein are prohibited unless expressly granted. Offenders will be held liable for damages. All rights are reserved in the event of a patent grant or utility model registration.

Cession et toute reproduction de ce document ainsi qu'utilisation et communication de son contenu sont interdites sauf autorisation expresse. Tout manquement oblige au paiement de dommages-intérêts. Tous droits réservés en cas de délivrance d'un brevet ou d'un modèle d'utilité.

Cessione e riproduzione di questo documento, uso e comunicazione del suo contenuto non sono consentiti se non espressamente autorizzati. Le violazioni comportano il risarcimento dei danni. Tutti i diritti sono riservati in caso di concessione di un brevetto o di registrazione di un modello di utilità.