	EXTERNAL SURFACE AEUSSERE OBERFLAECHE SURFACE EXTERIEURE SUPERFICIE ESTERNA	Ⓐ
I	JED-259	
II	JED-256-4	
III	JED-471	BLACK/SCHWARZ NOIR/NERO
IV	JED-CLASS KLASSE	25
V	JED-240-5	
VI	JED-371	

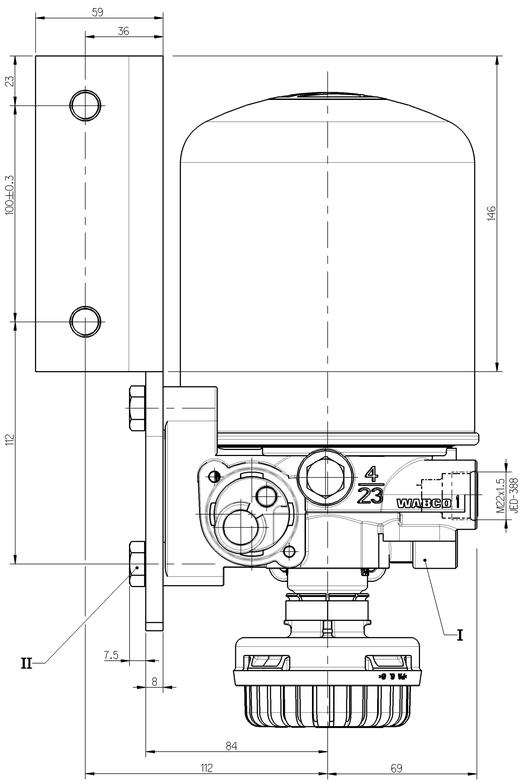

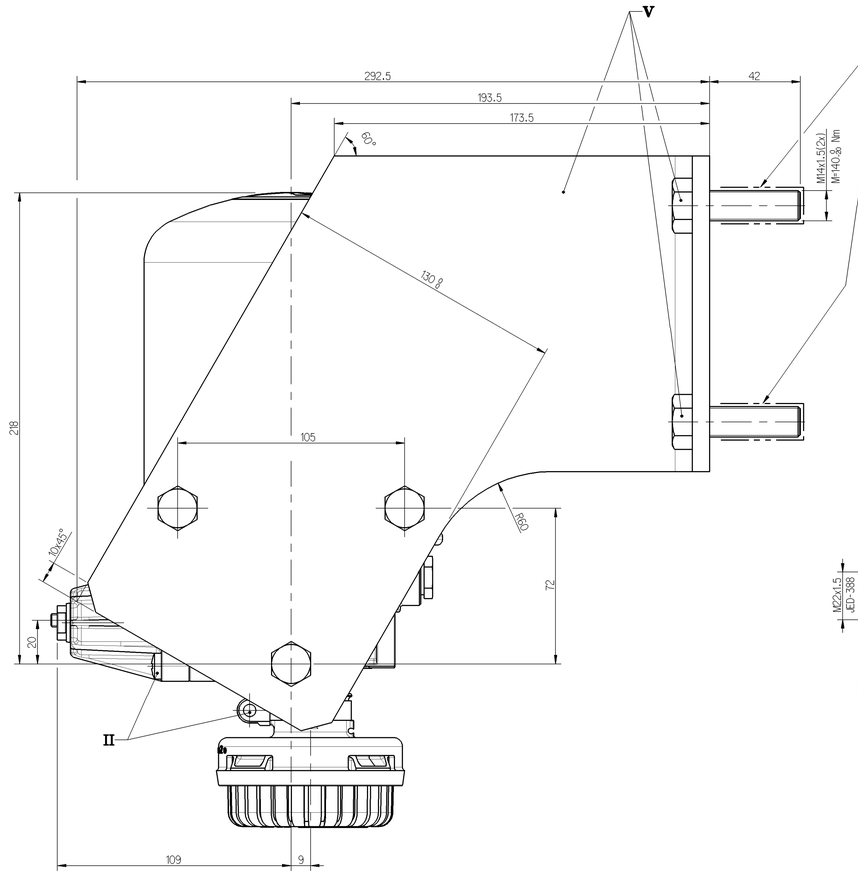

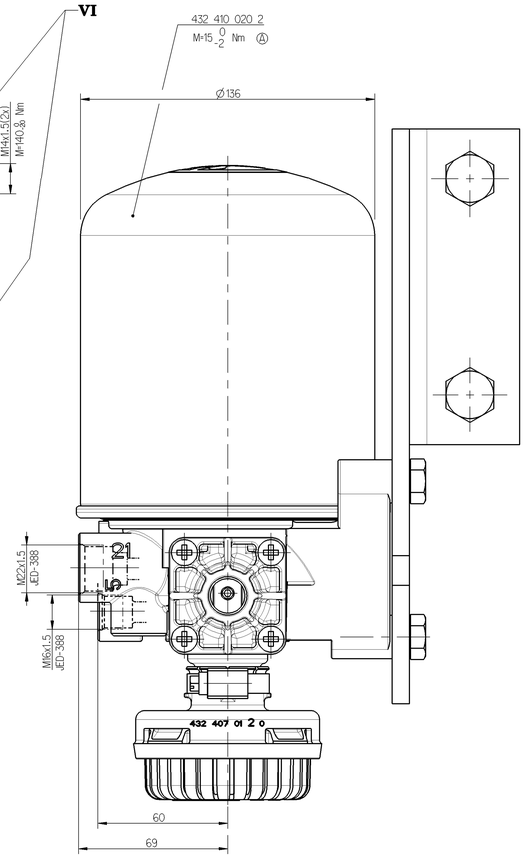

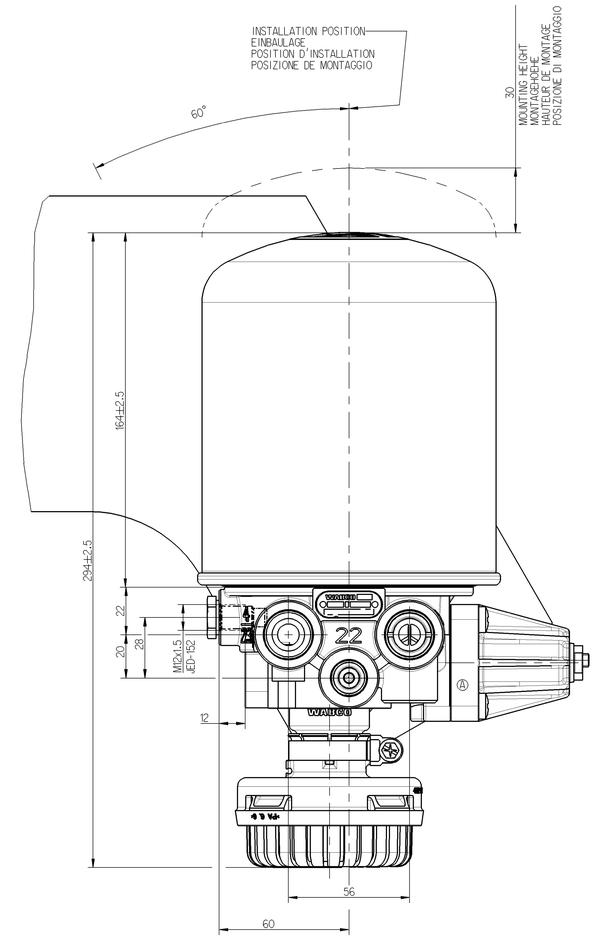

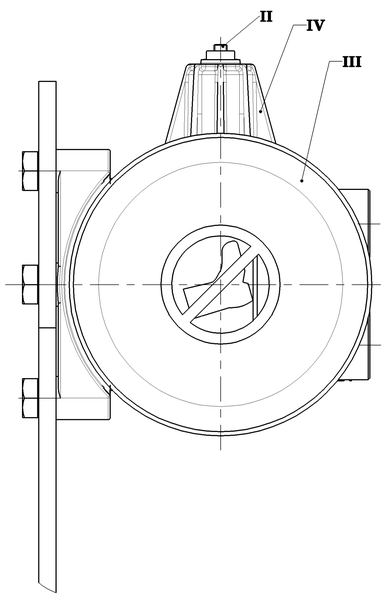

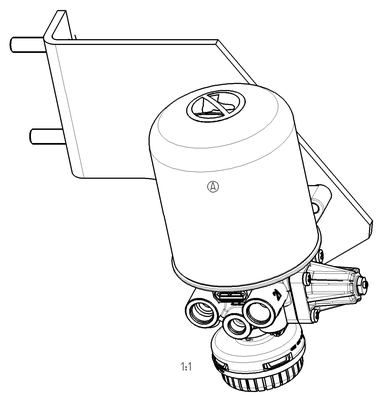

1	FROM THE COMPRESSOR VOM KOMPRESSOR PROVENANT DU COMPRESSEUR PROVENIENTE DEL COMPRESSORE	THERMAL RANGE OF CONTINUOUS APPLICATION THERMISCHER DAUERANWENDUNGSBEREICH PLAGE DE TEMPERATURE EN UTILISATION CONTINUE¹ COMPO DI APPLICAZIONE CONTINUA	-40°C...+65°C
21	TO THE RESERVOIRS ZU DEN LUFTBEHAELTERN AUX. RESERVOIR AL SERBATOI I PER	RESISTANCE TO HEAT WAERMEBESTAENDIGKEIT RESISTANCE A LA CHALEUR¹ RESISTANZA AL CALORE	MAX. +80°C
22	TO THE RESERVOIRS FOR REGENERATED AIR ZUM REGENERATIONS-LUFTBEHAELTER AUX RESERVOIRS D'AIR REGENERE AL SERBATOII PER L'ARIA RIGENERATA	MEDIUM: COMPRESSED AIR MEDIUM: DRUCKLUFT FLUIDE: AIR COMPRIME FLUIDO: ARIA COMPRESSA	
3	EXHAUST FOR COMPRESSED AIR ENTLUEFTUNG FUER DRUCKLUFT ECHAPPEMENT POUR AIR COMPRIME SCARIO PER ARIA COMPRESSA	WORKING PRESSURE BETRIEBSDRUCK PRESSION DE SERVICE¹ PRESSIONE D'ESERCIZIO	p_eMAX. = 13bar
4/23	TO THE COMPRESSED AIR ZUM DRUCKLUFT AUX AIR COMPRIME AL ARIA COMPRESSA	MAX. PERMISSIBLE ACELERATION MAX. ZULAESSIGE BESCHLEUNIGUNG ACCELERATION MAX. ADMISSIBLE ACCELERAZIONE MAX. AMMESSA	±15xg
		MAX.PERMISSIBLEFREQUENCY MAX. ZULAESSIGE FREQUENZ MAX. ADMISSIBLE FREQUENCE¹ MAX. AMMISSIBLE FREQUENZA	50 Hz
		TORQUE FOR CONNECTIONS ANZUGSMOMENT FUER EINSCHRAUBSTUTZEN COUPLE DE SERRAGE DES RACCORDS COPPIA DI SERRAGIO DEI RACCORDI	M12x1.5: M max.= 21Nm M16x1.5: M max.= 34Nm M22x1.5: M max.= 53Nm

COMBINED UNLOADER DRUCKREGLER REGULATEUR DE PRESSION¹ GRUPPO DI REGULAZIONE	
CUT OUT PRESSURE ABSCHALTDRUCK PRESSION D'OUVERTURE¹ PRESSIONE D'APERATURA	9±0.2bar
OPERATING RANGE SCHALTSPANNE PLAGE DE REGULATION¹ GAMME DI REGULAZIONE	$0.7^{+0.5}_{0}$ bar
INSTALLATION POSITION AS DRAW EINBAULAGE WIE GEZEICHNET POSITION D'INSTALLATION SUIVANT DESSIN POSIZIONE DI MONTAGGIO COME DISEGNATO	
MAX. PERMISSIBLE ACCELERATION MAX. ZULAESSIGE BESCHLEUNIGUNG ACCELERATION MAX. ADMISSIBLE ACCELERATIONE MAX. AMMESSA	±10Xg

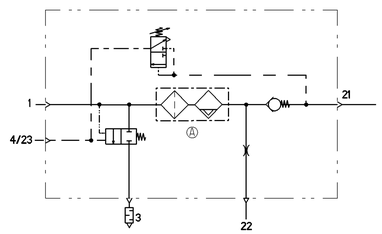

General Specification: JED-334-0 , Size ISO 14405-1 E							
Further Technical Data: Product Specification							
Doc. Code: 035	Sheet: 1 To 2						
General Tolerances JED-261							
Class 1)	Range of Nominal Dimensions (± mm)						
	≥ 30	> 50 ≥ 180	> 180 ≥ 400	> 400			
Fine	0.5	1.0	1.5	2.0			
Medium X	1.0	2.0	3.0	4.0	±3°		
Coarse	2.0	3.5	5.0	6.5			
Tapped Holes acc. JED-152 , JED-388							
1) Tolerance Class Applied Crosshatched							

Copyright WABCO®

Date	Signature	
Drawn: 2013-08-09	Marek	
Checked 2013-08-09	Lifer	
Expert Grzybowski		
Mass 7.15 kg	Scale 1:1 (1:2)	
Size A 0	CAD System Pro/E	

WABCO

AIR DRYER
LUFTTROCKNER
DESSICATORE D'AIR
ESSICATORE D'ARIA

Material No. 432 410 146 0

Date of first issue: 2007-08-09		
Doc.Code	Language	Sheet
005	ML	1/1

ECN-No.	Revision	Techn. Resp.	Replacement for
160456	5 x A	5050	

100mm