PART CODE	MATERIAL	SURFACE PROTECTION
I	ALUMINIUM ALLOY	CHROMATED
II	STEEL	PASSIVATED
III	STEEL	PAINTED
IV	PLASTIC	NO TREATMENT
V	BRASS	SILVER COATING

IDENTIFICATION		(1)	(2)	(3)	(4)					COMBINED UNLOADER, DRUCKREGLER, REGULATEUR DE PRESS., GRUPPO DI REGULAZIONE		(kg)
WABCO	CUSTOMERS NO. KUNDEN-NR. NO CLIENT CLIENTE	BODY GEHAEUSE CORPS CORPO	BODY GEHAEUSE CORPS CORPO			HEATING HEIZUNG CHAUFFAGE RISCALDAMENTO	BOTTOM BODEN FOND FONDO	DRYER RESERVOIR TROCKENMITTELBEHAELTER CARTOUCHE DU DESSICATEUR CARTUCCIA ESSICANTE		CUT OUT PRESSURE ABSCHALTDRUCK Pe PRESSION DE DECLENCH. PRESSIONE D' APERTURA	OPERATING RANGE SCHALTSPANNE PLAGE DE REGULATION GAMME DE REGUL.	MASS MASSE MASSE MASSE
432 410 042 0		432 420 012 2		X		894 260 040 2 24V⎓100W	A	432 410 020 2		8.5±0.2	0.7+0.5/0	4.23
432 410 043 0		432 420 012 2		X		894 260 040 2 24V⎓100W	A	432 410 020 2		9.5±0.2	0.7+0.5/0	4.23
432 410 079 0			432 420 031 2		X	894 260 040 2 24V⎓100W	A	432 410 020 2		8.5±0.2	0.7+0.5/0	4.23

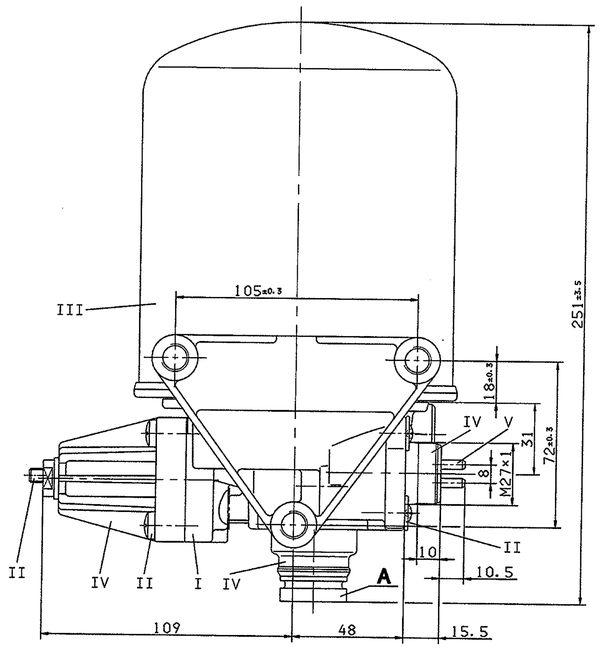

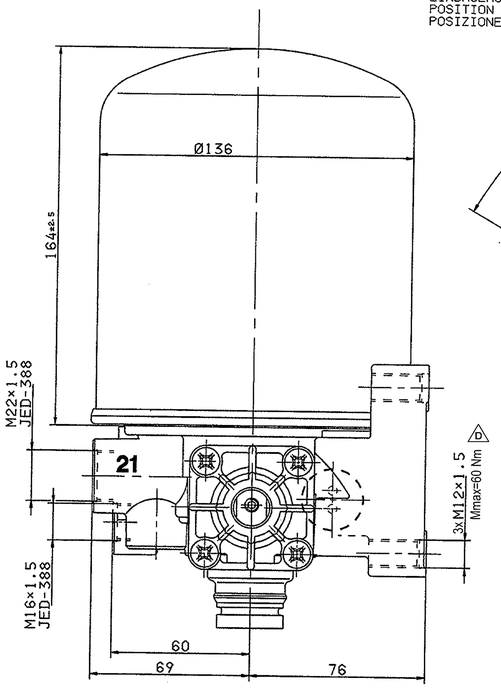

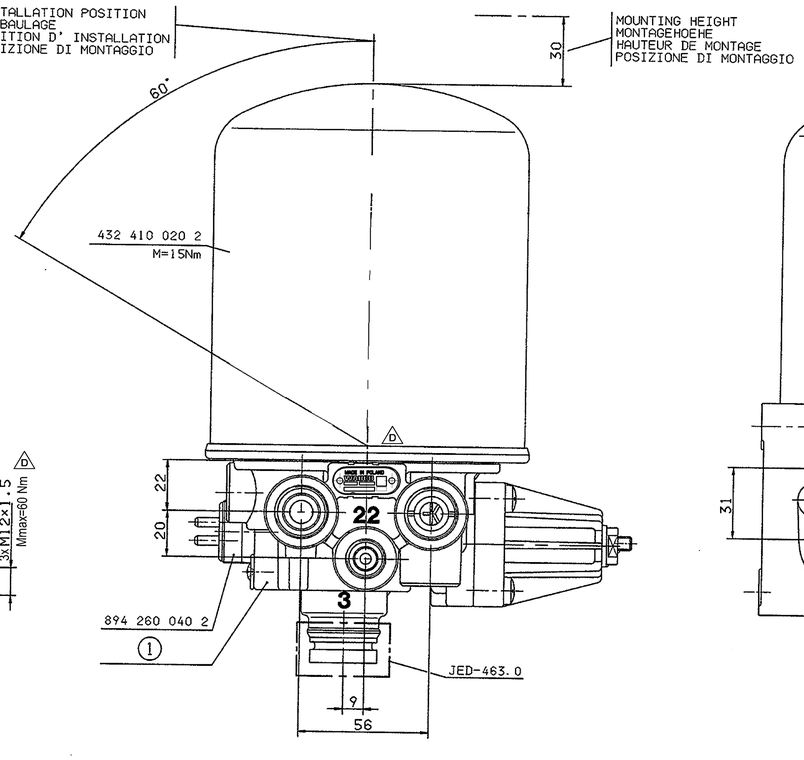

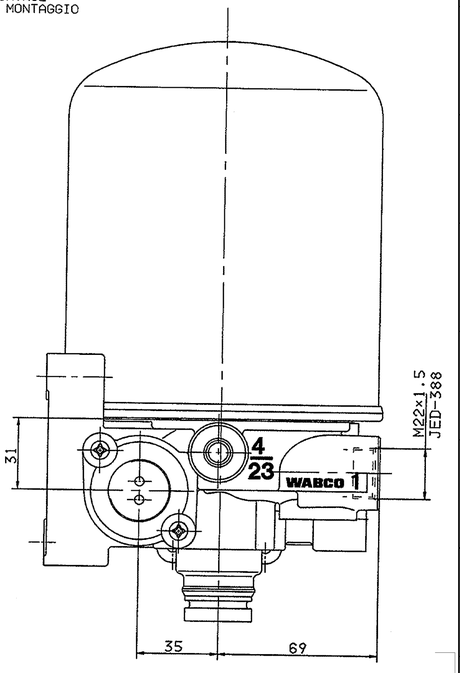

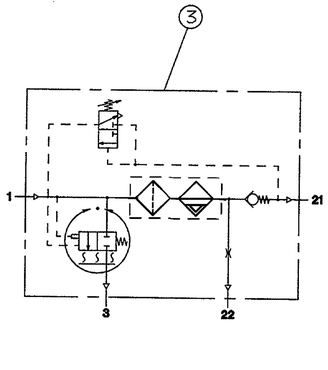

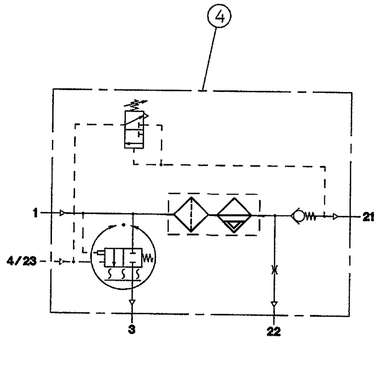

1 FROM THE COMPRESSURE
VOM KOMPRESSOR
PROVENANT DU COMPRESSEUR
PROVENIENTE DEL COMPRESSORE

21 TO THE RESERVOIRS
ZU DEN LUFTBEHAELTERN
AUX RESERVOIR
AL SERBATOII PER

22 TO THE RESERVOIRS FOR REGENERATED AIR
ZUM REGENERATIONS-LUFTBEHAELTER
AUX RESERVOIRS D' AIR REGENERE
AL SERBATOII PER L' ARIA RIGENERATA

3 EXHAUST FOR COMPRESSED AIR
ENTLUEFTUNG FUER DRUCKLUFT
ECHAPPEMENT POUR AIR COMPRIME
SCARIO PER ARIA COMPRESSA

4/23 TO THE COMPRESSOR
ZUM KOMPRESSOR
AU COMPRESSEUR
AL COMPRESSORE

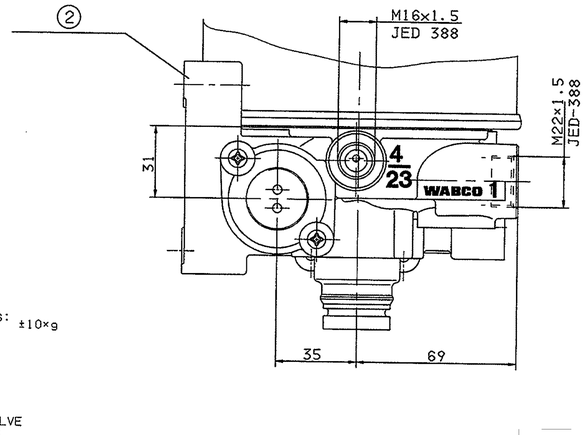

BOTTON BODEN FOND FONDO	PERMITTED SILENCER FREIGEGEBENER GERAEUSCHDAEMPFER SILENCIEUX PERMIS SILENZIATORE AMMESSO
A	432 407 012 0

THERMAL RANGE OF CONTINUOUS APPLICATION:
THERMISCHER DAUERANWENDUNGSBEREICH:
PLAGE DE TEMPERATURE EN UTILISATION CONTINUE: -40°C....+65°C
COMPO DI APPLICAZIONE CONTINUA:

RESISTANCE TO HEAT:
WAERMEBESTAENDIGKEIT:
RESISTANCE A LA CHALEUR: MAX. +80°C
RESISTANZA AL CALORE:

MEDIUM: COMPRESSED AIR
MEDIUM: DRUCKLUFT
FLUIDE: AIR COMPRIME
FLUIDO: ARIA COMPRESSA

WORKING PRESSURE:
BETRIEBSDRUCK:
PRESSION DE SERVICE: P_e max. =13bar
PRESSIONE D' ESERCIZIO:

TORQUE FOR CONNECTIONS:
ANZUGSMOMENT FUER EINSCHRAUBSTUTZEN: M16×1.5: $M_{max.}$= 34 Nm
COUPLE DE SERRAGE DES RACCORDS: M22×1.5: $M_{max.}$= 53 Nm
COPPIA DI SERRAGGIO DEI RACCORDI:

MAX. PERMISSIBLE FREQUENCY
MAX. ZULAESSIGE FREQUENZ
MAX. ADMISSIBLE FREQUENZE 50 Hz
MAX. AMMISSIBLE FREQUENZA

MAX. PERMISSIBLE ACCLERATION:
MAX. ZULAESSIGE BESCHLEUNIGUNG:
ACCELERATION MAX. ADMISSIBLE: ±10×g
ACCELERAZIONE MAX. AMMESSA:

INSTALLATION POSITION AS DRAWN
EINBAULAGE WIE GEZEICHNET
POSITION D' INSTALLATION SUIVANT DESSIN
POSIZIONE DI MONTAGGIO COME DISEGNATO

HEATING:
HEIZUNG:
CHAUFFAGE:
RISCALDAMENTO:

CUT-IN TEMPERATURE
EINSCHALT-TEMPERATUR
TEMPERATURE DE FERMETURE 7°±6°C
TEMPERATURA DI CHIUSURA

CUT-OFF TEMPERATURE
AUSSCHALT-TEMPERATUR
TEMPERATURE DE MISE 29.5°±3°C
TEMPERATURA DI APERTURA

BATTERY VOLTAGE:
BATTERIESPANNUNG:
TENSION DE BATTERIE: 24^{+4}_{-4} V DC
TENSIONE DI BATTERIA:

POWER:		WITHOUT CURRENT STROMLOS SANS COURANT SENZA CORRENTE		WITH BEI AVEC CON	24 V DC	APPLIED ACROSS THE HEATER CONTACTS DIREKT AN DEN HEIZUNGSKONTAKTEN APPLIQUEE SUR LES CONTACTS DE CHAUFFAGE APPLICATA SULLE CONTATTI DI RISCALDAMENTO
LEISTUNG: PUISSANCE: POTENZA:	100 W		95^{-8}_{-8} W			

COMBINED UNLOADER:
DRUCKREGLER:
REGULATEUR DE PRESS.:
GRUPPO DI REGULAZIONE:

CUT OUT PRESSURE ABSCHALTDRUCK PRESSION DE DECL. PRESSIONE D'APERT. (bar)	DYNAMIC PRESSURE OF THE SAFETY VALVE STAUDRUCK DES SICHERHEITSVENTILES PRESSION DYNAMIQUE DU SOUPAPE DE SECURITE PRESSIONE DINAMICA DELLA VALVOLA DI SICUREZZA (bar)
7.1 ÷ 8.5	≤14.5 (BEI $\dot{V}_n$=100dm³/min.)
8.6 ÷ 10.0	≤16.0 (BEI $\dot{V}_n$=100dm³/min.)

Diese Unterlage darf ohne unsere ausdrückliche Zustimmung weder vervielfältigt noch Dritten zugänglich gemacht werden. Das Original dieses Dokumentes ist im Sinne des Gesetzes über das Urheberrecht Eigentum der WABCO GmbH.
This document may not be reproduced or made available to third parties without our express consent. The original of this document is the property of WABCO GmbH within the meaning of the law on copyright.
Questo documento non può essere riprodotto o messo a disposizione di terzi senza il nostro esplicito consenso. Ai sensi della legge sul diritto d'autore, l'originale di questo documento è proprietà della WABCO GmbH.
Este documento no puede ser reproducido ni puesto a disposición de terceros sin nuestro consentimiento explícito. Según la ley de derechos de autor, el original de este documento es propiedad de WABCO GmbH.
Ten dokument nie może być powielany ani udostępniany osobom trzecim bez naszej wyraźnej zgody. Zgodnie z prawem autorskim, oryginał niniejszego dokumentu jest własnością firmy WABCO GmbH.

General Specification: ISO 8015, JED-354-1, Size ISO 14405 LP				Copyright WABCO®		WABCO	
Further Technical Data: Product Specification				Date	Signature		
Doc. Code: 035		Sheet:	To	2022-07-04	Kurzynski	AIR DRYER LUFTTROCKNER DESSICATEUR D' AIR ESSICATORE D' ARIA	
General Tolerances JED-261				Checked			
Range of nominal dimensions in mm				2022-07-04	Kostrzewa		
Class 1)	≤ 50	> 50 ≤ 180	> 180 ≤ 400	> 400		Dimensions in mm	
Fine	±0.5	±1	±1.5	±2		Mass / Scale	Material No. / Date of first issue
Medium X	±1	±2	±3	±4	±3°	kg / 1:1	432 410 912 0 / Doc./Code 053, Language ML, Sheet 1/1
Coarse	±2	±3.5	±5	±6.5		Size / CAD System	
Tapped Holes acc. JED-152						A 0 / TIF	ECN-No. 510690, Revision 3 x D, Techo. Repl. 5050, Replacement for 432 410 902 0
1) Tolerance Class Applied Crosshatched							