SURFACE PROTECTION OBERFLAECHENSCHUTZ PROTECTION DE SURFACE PROTEZIONE SUPERFICIALE	
I	JED-259
II	JED-256
III	JED-471 SCHWARZ/BLACK
IV	KUNSTSTOFF
V	JED-570.656
VI	JED-260
VII	JED-257

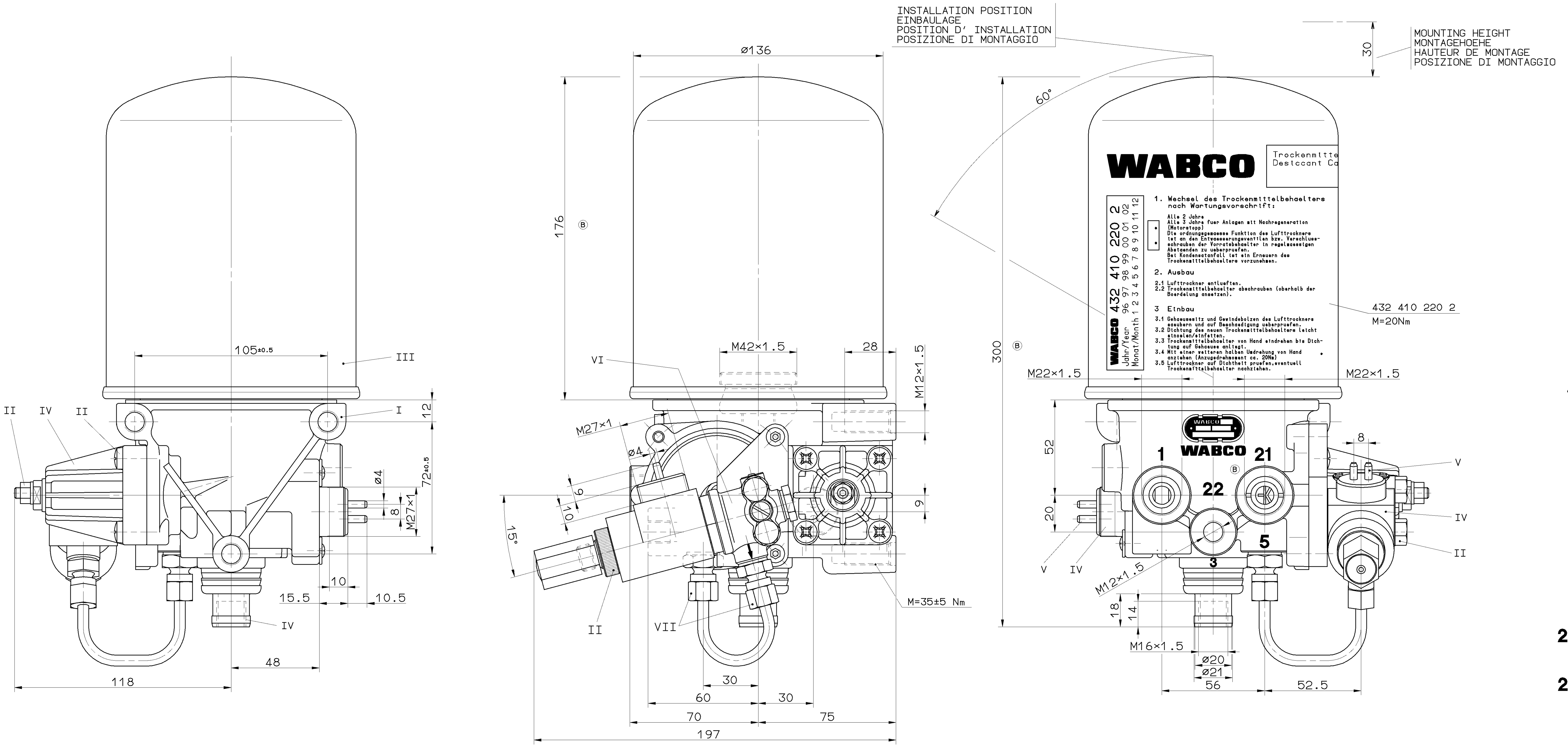

3/2 SOLENOID VALVE
3/2 MAGNETVENTIL
ELECTROVANNE 3/2
ELETTROVALVOLA 3/2

1 SUPPLY
ENERGIEZUFLUSS
ALIMENTATION
ALIMENTAZIONE

2 DELIVERY
ENERGIEABFLUSS
UTILISATION
MANDATA

3 EXHAUST FOR COMPRESSED AIR
ENTLUEFTUNG FUER DRUCKLUFT
ECHAPPEMENT POUR AIR COMPRIME
SCARIO PER ARIA COMPRESSA

4 ELECTRICAL CONTROL
ELEKTRISCHER STEUERANSCHLUSS
COMMANDE ELECTRIQUE
COMANDO ELETTRICO

AIR DRYER
LUFTTROCKNER
DESSICATEUR D' AIR
ESSICATORE D' ARIA

1 FROM THE COMPRESSORE
VOM KOMPRESSOR
PROVENANT DU COMPRESSEUR
PROVENIENTE DEL COMPRESSORE

21 TO THE RESERVOIRS
ZU DEN LUFTBEHAELTERN
AUX RESERVOIR
AL SERBATOII PER

22 TO THE RESERVOIRS FOR REGENERATED AIR
ZUM REGENERATIONS-LUFTBEHAELTER
AUX RESERVOIRS D' AIR REGENERE
AL SERBATOII PER L' ARIA RIGENERATA

3 EXHAUST FOR COMPRESSED AIR
ENTLUEFTUNG FUER DRUCKLUFT
ECHAPPEMENT POUR AIR COMPRIME
SCARIO PER ARIA COMPRESSA

5	CONTROL PORT STEUERANSCHLUSS ORIFICE DE COMMANDE ORIFIZIO DI COMANDO	EXHAUST FOR COMPRESSED AIR ENTLUEFTUNG FUER DRUCKLUFT ECHAPPEMENT POUR AIR COMPRIME SCARIO PER ARIA COMPRESSA

TORQUE FOR CONNECTIONS:
ANZUGSMOMENT FUER EINSCHRAUBSTUTZEN: M12×1.5: $M_{max.}$ = 21 Nm
COUPLE DE SERRAGE DES RACCORDS: M22×1.5: $M_{max.}$ = 53 Nm
COPPIA DI SERRAGGIO DEI RACCORDI:

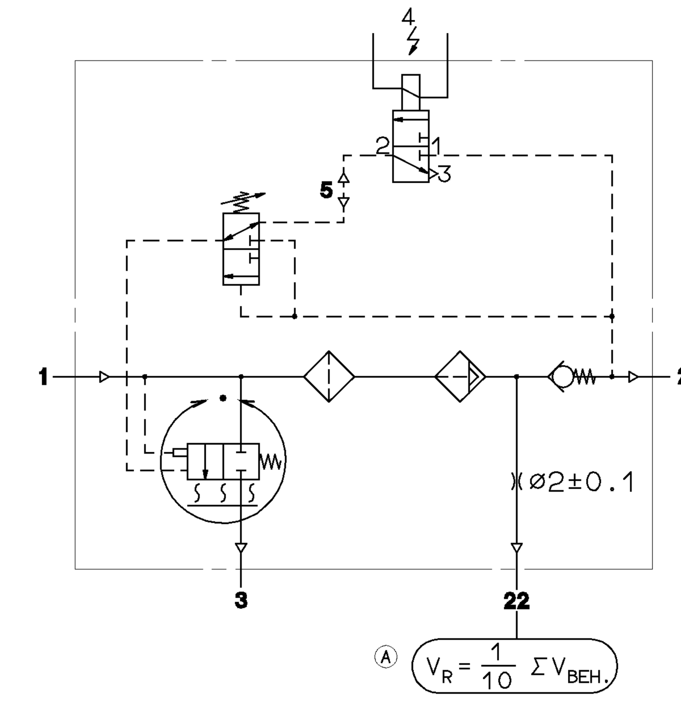

Ⓐ $V_R = \frac{1}{10} \Sigma V_{BEH.}$

TECHNICAL DATA, TECHNISCHE DATEN, CARACTERISTIQUES TECHNIQUES, CARATTERISTICHE TECNICHE

WORKING PRESSURE:
BETRIEBSDRUCK:
PRESSION DE SERVICE: p_e max.=20bar
PRESSIONE D' ESERCIZIO:

MEDIUM: COMPRESSED AIR
MEDIUM: DRUCKLUFT
FLUIDE: AIR COMPRIME
FLUIDO: ARIA COMPRESSA

THERMAL RANGE OF CONTINUOUS APPLICATION:
THERMISCHER DAUERANWENDUNGSBEREICH:
PLAGE DE TEMPERATURE EN UTILISATION CONTINUE: -40° C....+65° C
COMPO DI APPLICAZIONE CONTINUA:

RESISTANCE TO HEAT:
WAERMEBESTAENDIGKEIT: MAX.+80° C
RESISTANCE A LA CHALEUR:
RESISTANZA AL CALORE:

MAX. PERMISSIBLE ACCLERATION:
MAX. ZULAESSIGE BESCHLEUNIGUNG: ±10×g
ACCELERATION MAX. ADMISSIBLE:
ACCELERAZIONE MAX. AMMESSA:

MAX. PERMISSIBLE FREQUENCY
MAX. ZULAESSIGE FREQUENZ 50 Hz
MAX. ADMISSIBLE FREQUENZE
MAX. AMMISSIBLE FREQUENZA

INSTALLATION POSITION AS DRAWN
EINBAULAGE WIE GEZEICHNET
POSITION D' INSTALLATION SUIVANT DESSIN
POSIZIONE DI MONTAGGIO COME DISEGNATO

Ⓐ SUITABLE FOR FORDING
WATFAEHIG
APTE AU PASSAGE A GUE
IMPERMEABILE ALL' IMMERSIONE

HEATING:
HEIZUNG: 24V==100W
CHAUFFAGE:
RISCALDAMENTO:

CUT-IN TEMPERATURE
EINSCHALT-TEMPERATUR 7° ±6° C
TEMPERATURE DE FERMETURE
TEMPERATURA DI CHIUSURA

CUT-OFF TEMPERATURE
AUSSCHALT-TEMPERATUR 29.5° ±3° C
TEMPERATURE DE MISE
TEMPERATURA DI APERTURA

COMBINED UNLOADER: MIN. CUT-IN PRESSURE Ⓐ
DRUCKREGLER: MIN. EINSCHALTDRUCK
REGULATEUR DE PRESSION: MIN. PRESSION D' ENCLENCHEMENT p_e = 15.8 bar
GRUPPO DI REGULAZIONE: MIN. PRESSIONE DI INNESTO

CUT OUT PRESSURE
ABSCHALTDRUCK
PRESSION DE DECL. p_e = 18.3±0.5 bar
PRESSIONE D' APERT.

OPERATING RANGE
SCHALTSPANNE
PLAGE DE REGULATION $\Delta p_e = 1.5^{+1}_{0}$ bar
GAMME DE REGULAZIONE

COMBINED UNLOADER: CUT OUT PRESSURE DRUCKREGLER: ABSCHALTDRUCK REGULATEUR DE PRESS.: PRESSION DE DECL. GRUPPO DI REGULAZIONE: PRESSIONE D'APERT. (bar)	DYNAMIC PRESSURE OF THE SAFETY VALVE STAUDRUCK DES SICHERHEITSVENTILES PRESSION DYNAMIQUE DU SOUPAPE DE SECURITE PRESSIONE DINAMICA DELLA VALVOLA DI SICUREZZA (bar)
Ⓐ 18.3±0.5	≤25.0 (BEI $\dot{V}_n$ =100dm³/min.)

3/2 SOLENOID VALVE
3/2 MAGNETVENTIL
ELECTROVANNE 3/2
ELETTROVALVOLA 3/2

THE VALVE CORRESPONDS TO THE REGULATIONS FOR ELECTROMAGNETIC DEVICES ACCORDING TO VDE 0580
DAS GERAET ENTSPRICHT DEN BESTIMMUNGEN FUER ELEKTROMAGNETISCHE GERAETE NACH VDE 0580
LE VALVE CORRESPOND AUX CONDITIONS POUR DES APPAREILS ELECTROMAGNETIQUES SUIVANT VDE 0580
LA VALVOLA CORRISPONDE ALLE CONDIZIONI PER APPARECCHI ELETTROMAGNETICHI SECONDO VDE 0580

WORKING PRESSURE :
BETRIEBSDRUCK : p_e = 10÷19 bar
PRESSION D'UTILISATION :
PRESSION DI ESERCIZIO :

TYPE OF CURRENT : DIRECT CURRENT
STROMART : GLEICHSTROM
NATURE DU COURANT : COURANT CONTINUE
NATURA DELLA CORRENTE : CORRENTE CONTINUA

NOMINAL VOLTAGE :
NENNSPANNUNG : $U_N = 24^{+4.8}_{-2.4}$ V
VOLTAGE NOMINAL :
VOLTAGGIO NOMINALE :

NOMINAL CURRENT :
NENNSTROM : I_N = 1.4 A
COURANT NOMINAL :
CORRENTE NOMINALE :

DUTY CYCLE AT NOMINAL SERVICE :
EINSCHALTDAUER BEI NENNBETRIEB : 20% ED / 5 min
DUREE DE FONCTIONNEMENT AU SERVICE NOMINAL :
DURATA D' INTERVENTO :

TYPE OF PROTECTION ACCORD. TO DIN 40050 SH.9 :
SCHUTZART NACH DIN 40050 BL.9 : IP 68 A
MODE DE PROTECTION SUIVANT DIN 40050 FEUILLE 9 :
TIPO DI PROTEZIONE SECONDO DIN 40050 FOGLIO 9 :

WITH SEALED CONNECTIONS
MIT ABGEDICHTETEN ANSCHLUESSEN
AVEC CONNEXIONS ETANCHES
CON CONNESSIONI SIGILLATI

PROTECTION CLASS :
SCHUTZKLASSE : III
CLASSE DE PROTECTION :
CLASSE DI PROTEZIONE :

VOLTAGE PEAKS ON BREAKING
ABSCHALTSPANNUNGSSPITZEN < |120| V
VOLTAGE DE POINTE ALLA RUPTURE
VOLTAGGI DELLE PUNTE ALLA ROTTURA

SOCKET :
GERAETESTECKDOSE : 894 600 451 2
PRISE DE COURANT :
PRESA DI CORRENTE :

GENERAL SPECIFICATION: JED-334						
FURTHER TECHNICAL DATA:						
DOC. CODE:		SHEET: TO				
GENERAL TOLERANCES						
CLASS 1)		RANGE OF NOMINAL DIMENSIONS (± mm) ≤50	> 50 ≤180	>180 ≤400	>400	∢
FINE		0,5	1,0	1,5	2,0	
MEDIUM	X	1,0	2,0	3,0	4,0	± 3°
COARSE		2,0	3,5	5,0	6,5	
TAPPED HOLES ACC. ISO 4039 / JED-152						
1) TOLERANCE CLASS APPLIED CROSSMARKED						

DCN-NO.	REV.	DATE
056689	3×B	96-03-04
054112	4×A	93-09-21

CADAM-DRAWING COPYRIGHT		WABCO
DATE	SIGNATURE	
DRAWN: 93-04-14	SEEWALD	AIR DRYER LUFTTROCKNER DESSICATEUR D' AIR ESSICATORE D' ARIA
CHECKED: 93-04-14	DEIKE	
STANDARDIZATION: 93-04-14		
MASS 5.5 KG	SCALE 1:1	PRODUCT IDENTIFICATION NO. 432 411 166 0 — DOC. CODE 6 0 5 — SHEET 1/1
SIZE A 0	T.R.I. 140	SHAPE CODE — REPLACEMENT FOR

100mm

EXPERT CODE 731 PRODUCT TYPE 00X

1609/019/3/04.93

605/653