EXTERNAL SURFACE AEUSSERE OBERFLAECHE SURFACE EXTERIEURE SUPERFICIE ESTERNA	
I	JED-259
II	JED-256-1
III	JED-471
IV	PLASTIC/KUNSTSTOFF
V	JED-260

WABCO	BACK FLOW LIMITING VALVE RUECKSTROEMBEGR.VENTIL ⊿ p(bar)	BODY GEHAEUSE BOITIIER CORPO	(I)	(II)	(III)	(IV)	HEATING HEIZUNG CHAUFFAGE RISCALDAMENTO		DRIVER RESERVOIR TROCKENMITTELBEHAELTER CARTOUCHE DUDESSICATEUR CARTUCCIA ESSICANTE		TREAD IN PORT GEWINDE IN ANSCHUSS FILETAGE EN ORIFICE FILETTO IN ORIFIZIO 1	21	4	b	MASS MASSE MASSE MASSA (kg)
432 413 001 0	0.7 +0.05/-0.1	432 410 571 2	X	X			894 260 046 2	12V=-=100W *	432 420 220 2		1/2-14 NPTF	1/2-14 NPTF	1/4-18 NPTF	1/2-13 UNC 2B	4.20
432 413 002 0	0.7 +0.05/-0.1	432 410 571 2	X	X			894 260 047 2	24V=-=100W **	432 420 220 2		1/2-14 NPTF	1/2-14 NPTF	1/4-18 NPTF	1/2-13 UNC 2B	4.20
432 413 003 0	0.7 +0.05/-0.1	432 410 571 2		X			894 260 046 2	12V=-=100W *	432 420 220 2		1/2-14 NPTF	1/2-14 NPTF	1/4-18 NPTF	1/2-13 UNC 2B	4.20
432 413 066 0	0.7 +0.05/-0.1	432 410 571 2	X			X	894 260 046 2	12V=-=100W *	432 420 220 2		1/2-14 NPTF	1/2-14 NPTF	1/4-18 NPTF	1/2-13 UNC 2B	4.20

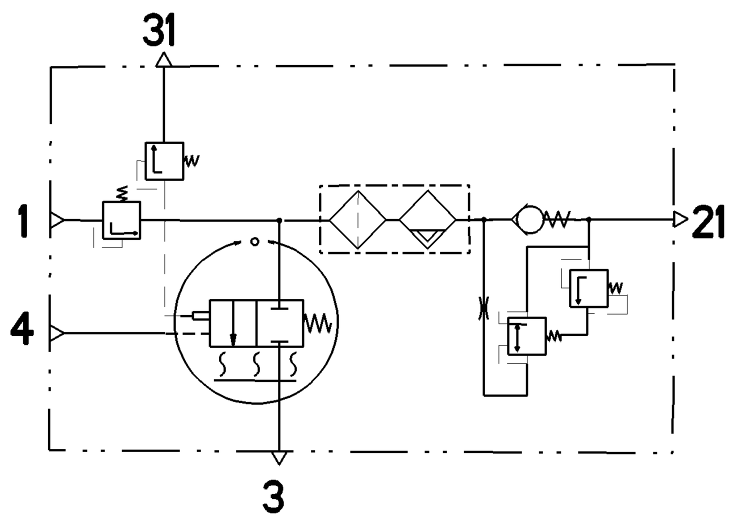

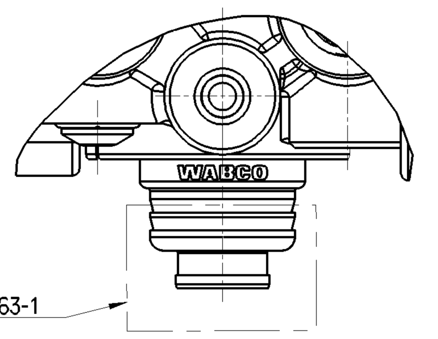

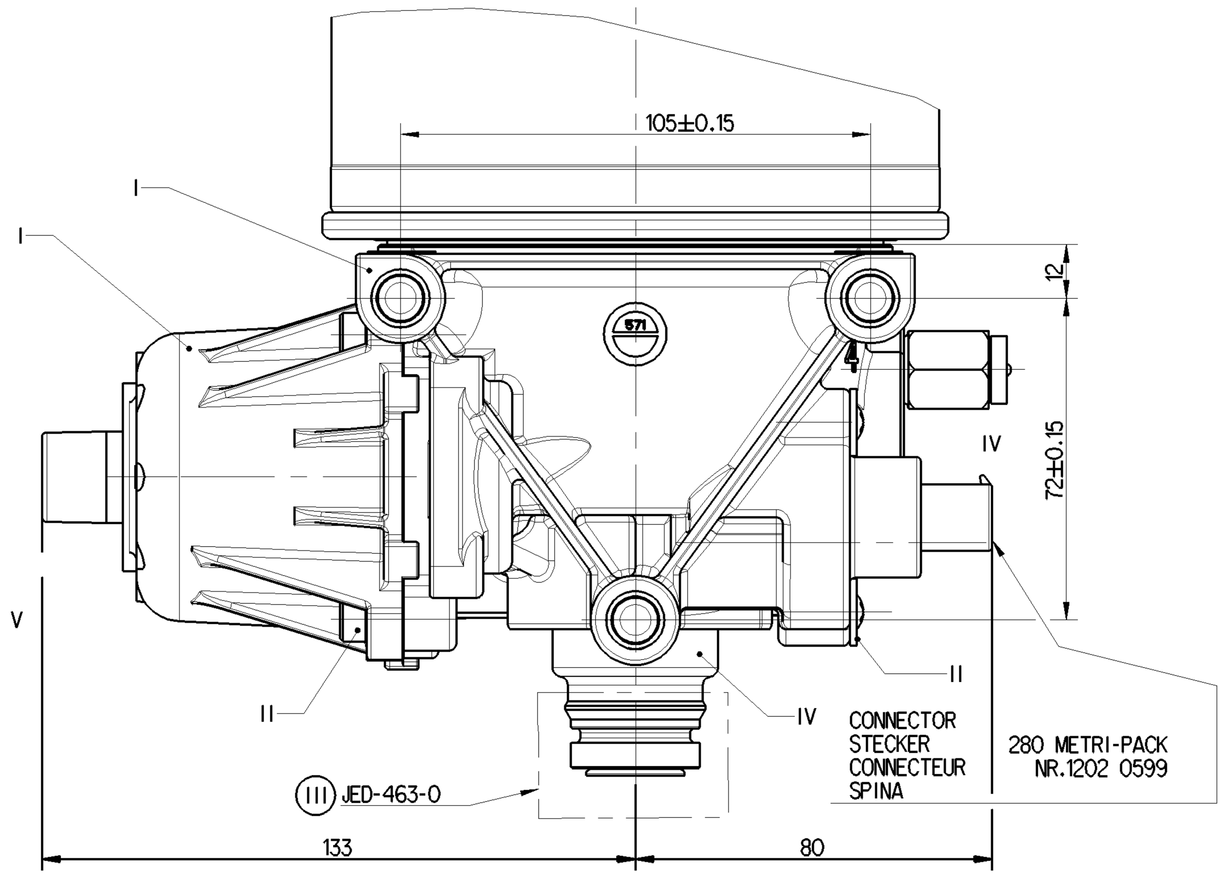

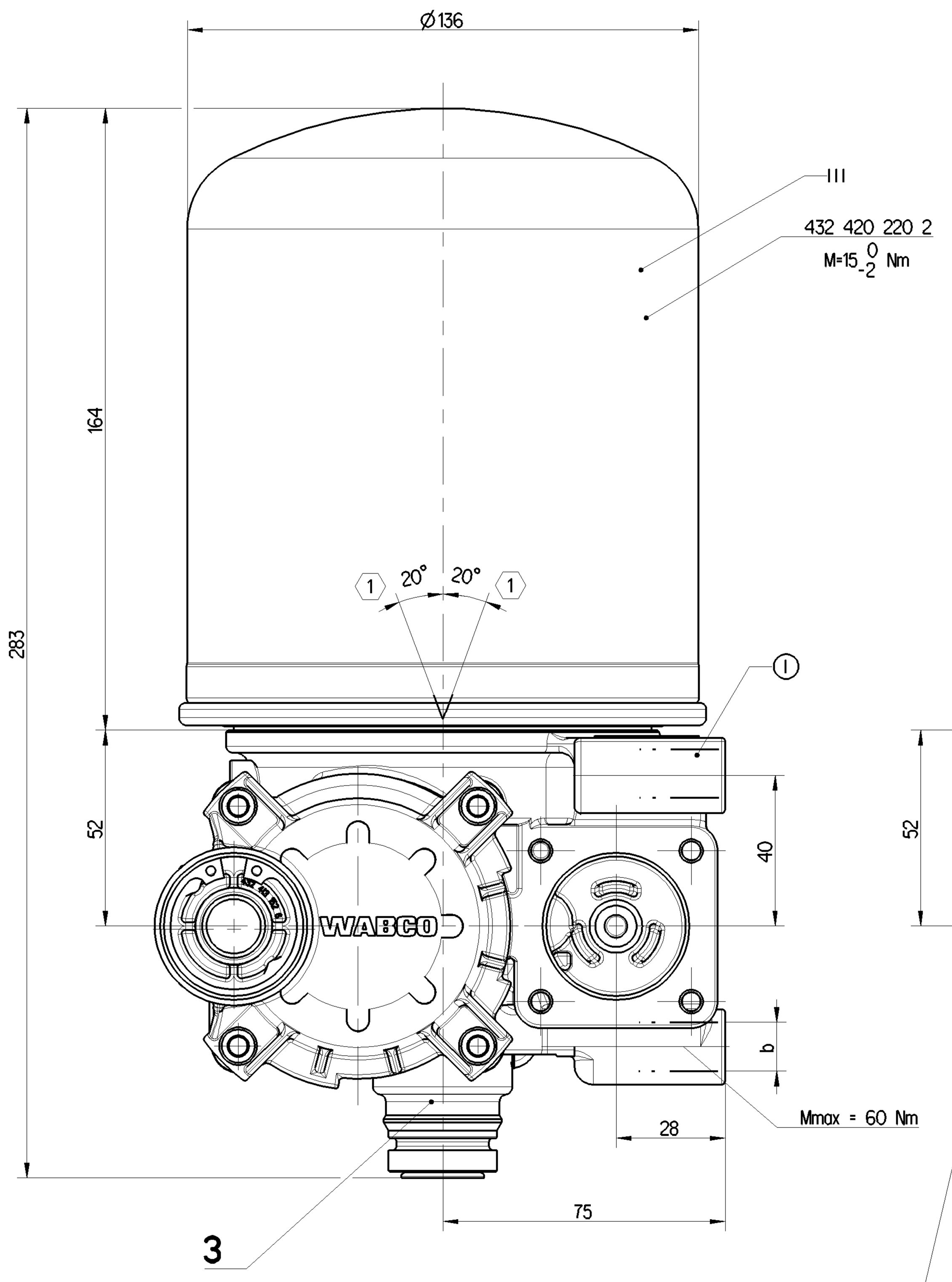

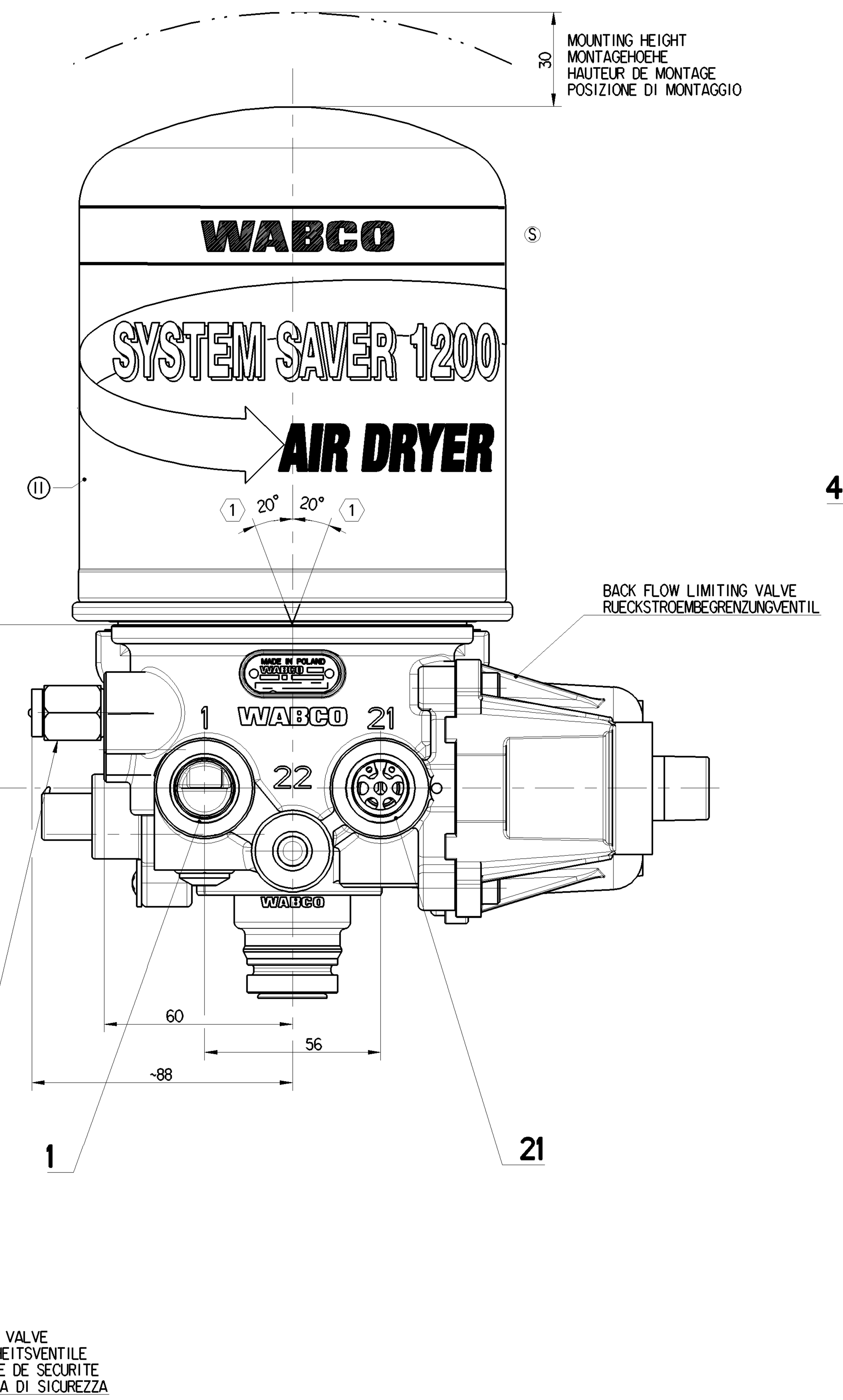

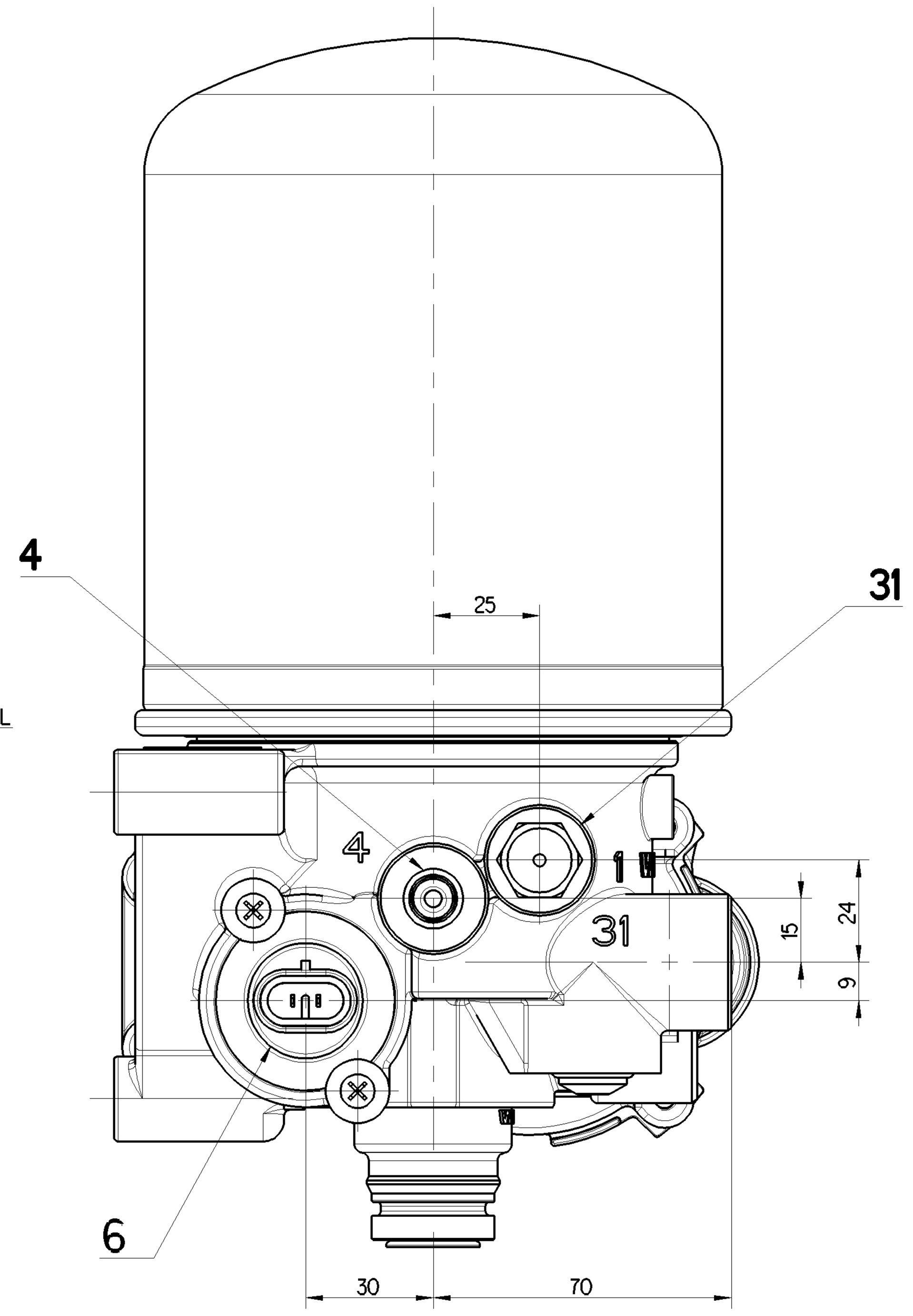

PORT ANSCHLUSS ORIFICE ORIFIZIO	FUNCTION FUNCTION FONCTION FUNZIONE	THREAD GEWINDE FILETAGE FILETTAURA
1	FROM THE COMPRESSOR VOM LUFTPRESSER PROVENANT DU COMPRESSEUR PROVENIENTE DEL COMPRESSORE	1/2 -14 NPTF
21	TO THE RESERVOIRS ZU DEN LUFTBEHAELTERN AUX RESERVOIR AL SERBATOII PER	1/2 -14 NPTF
3	EXHAUST FOR COMPPRESSED AIR ENTLUEFTUNG FUER DRUCKLUFT ECHAPPEMENT POUR AIR COMPRIME SCARIO PER AIRA COMPRESSA	-
31	EXHAUST OF THE SAFETY VALVE ENTLUEFTUNG DES SICHERHEITSVENTILES ECHAPPEMENT DE LA SOUPAPE DE SECURITE SCARICO DELLA VALVOLA DI SICUREZZA	-
4	CONTROL PORT STEURANSCHLUSS ORIFICE DE COMMANDE ORIFIZIO DI COMANDO	1/4 -18 NPTF
6	HEATING HEIZUNG CHAUFFAGE RISCALDAMENTO	-

THERMAL RANGE OF CONTINUOUS APPLICATION:
THERMISCHER DAUERANWENDUNGSBEREICH:
PLAGE DE TEMPERATURE EN UTILISATION CONTINUE:
COMPO DI APPLICAZIONE CONTINUA: -40°C....+65 °C

RESISTANCE TO HEAT:
WAERMEBESTAENDIGKEIT:
RESISTANCE A LA CHALEUR:
RESISTANZA AL CALORE: max +80 °C

MEDIUM: COMPRESSED AIR
MEDIUM: DRUCKLUFT
FLUIDE: AIR COMPRIME
FLUIDO: ARIA COMPRESSA

WORKING PRESSURE:
BETRIEBSDRUCK:
PRESSION DE SERVICE:
PRESSIONE D' ESERCIZIO: $p_e$max=10 bar ≙ 145psi

(1) INSTALLATION POSITION AS DRAWN
EINBAULAGE WIE GEZEICHNET
POSITION D' INSTALLATION SUIVANT DESSIN
POSIZIONE DI MONTAGGIO COME DISEGNATO

TORQUE FOR CONNECTIONS:
ANZUGSMOMENT FUER EINSCHRAUBSTUTZEN:
COUPLE DE SERRAGE DES RACCORDS:
COPPIA DI SERRAGGIO DEI RACCORDI:

IF CASE OF GREASED THREAD
BEI GEFETTETEN GEWINDE
EN CAS DE FILETAGE GRAISSE
IN CASO DI FILETTATURA INGRASSATA

M1/4-18 NPTF: Mmax=30 Nm
M3/8-18 NPTF: Mmax=30 Nm
M1/2-14 NPTF: Mmax=30 Nm

COMBINED UNLOADER
DRUCKREGLER
REGULATEUR DE PRESS
GRUPPO DI REGULAZIONE

CUT-OUT PRESSURE
ABSCHALTDRUCK
PRESSION D'OUVERTURE
PRESSIONE D'APERTURA ≙ ≥ 7.9 bar ... ≤ 9 bar / ≥ 115 psi ... ≤ 150 psi

HEATING:
HEIZUNG:
CHAUFFAGE:
RISCALDAMENTO:

CUT IN TEMPERATURE
EINSCHALT - TEMPERATUR
TEMPERATURE DE FERMETURE
TEMPERATURA DI CHIUSURA 7 ±6 °C

CUT OUT TEMPERATURE
AUSSCHALT-TEMPERATUR
TEMPERATURE DE MISE
TEMPERATURA DI APERTURA 29.5 ±3.0 °C

BATTERY VOLTAGE :
BATTERIESPANNUNG :
TENSION DI BATTERIE :
TENSIONE DI BATTERIA : * 12^{+4}_{-2} V DC | ** $24.0^{+4.8}_{-2.4}$ V DC

POWER :
LEISTUNG :
PUISSANCE :
POTENZA : 100W

WITHOUT CURRENT
STROMLOS
SANS COURANT
SENZA CORRENTE | $95^{\ 0}_{-5}$ W WITH / BEI / AVEC / CON 12V DC / 24V DC

APPLIED ACROSS THE HEATER CONTACTS
DIREKT AN DEN HEIZUNGSKONTAKTEN
APPLIQUEE SUR LES CONTACTS DE CHAFFAGE
APPLICATA SULLE CONTATTI DI RISCALDAMENTO

SAFFETY PRESSUIRE OF THE IDLE CONTROL VALVE AT
SICHERHEITDRUCK DES LEERLAUFVENTILES BEI V V= 100dm3 : ≤ 25bar ≙ 363psi

OPENING PRESSURE
OFFENUNGSDRUCK
PRESSION DI OVERTURE
PRESSIONE DI APERTURA Pe = 12.8±1 bar ≙ 185±15 psi

General Specification: JED-334-1 , Size ISO 14405 LP						
Further Technical Data: Product Specification						
Doc. Code: 035			Sheet: 1 To 7			
General Tolerances JED-261						
Class 1)		≤ 50	> 50 ≤ 180	> 180 ≤ 400	> 400	
Fine		0.5	1.0	1.5	2.0	
Medium	X	1.0	2.0	3.0	4.0	±3°
Coarse		2.0	3.5	5.0	6.5	
Tapped Holes acc. JED-686						
1) Tolerance Class Applied Crossmarked						

Copyright WABCO®

Date	Signature	
Drawn		
2019-08-13	Srinivasaperumal	
Checked		
2019-08-13	Zawisza	
Expert		
	Puto	

WABCO
AIR DRYER
LUFTTROCKNER
DESSICATEUR D'AIR
ESSICATORE D'AIRA

Mass	Scale	Material No.	Date of first issue: 2016-11-24		
- KG	1:1	432 413 900 0	Doc.Code 053	Language ML	Sheet 1/1
Size A 0	CAD System CREO	ECN-No. 501845	Revision 1x S	Techn. Resp. 5050	Replacement for -