EXTERNAL SURFACE Ⓕ AEUSSERE OBERFLAECHE SURFACE EXTERIEURE SUPERFICIE ESTERNA	①	②
	20°	20°
	60°	0°

I	JED-259
II	JED-256 OR JED-256-1
III	JED-471 SCHWARZ/BLACK
IV	PLASTIC/KUNSTOFF
V	JED-260

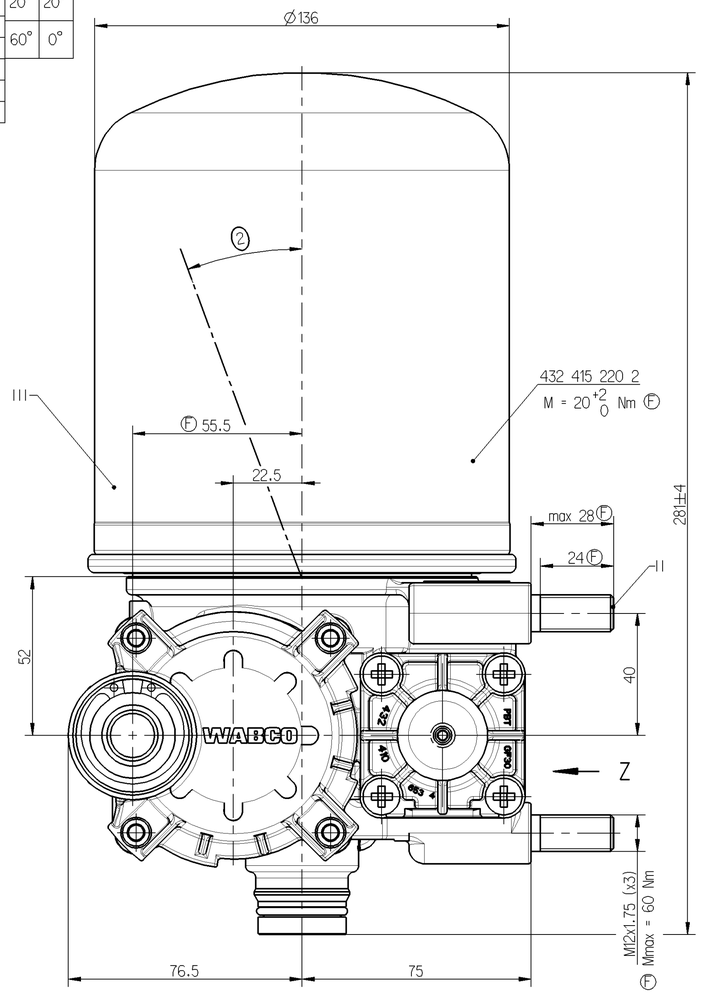

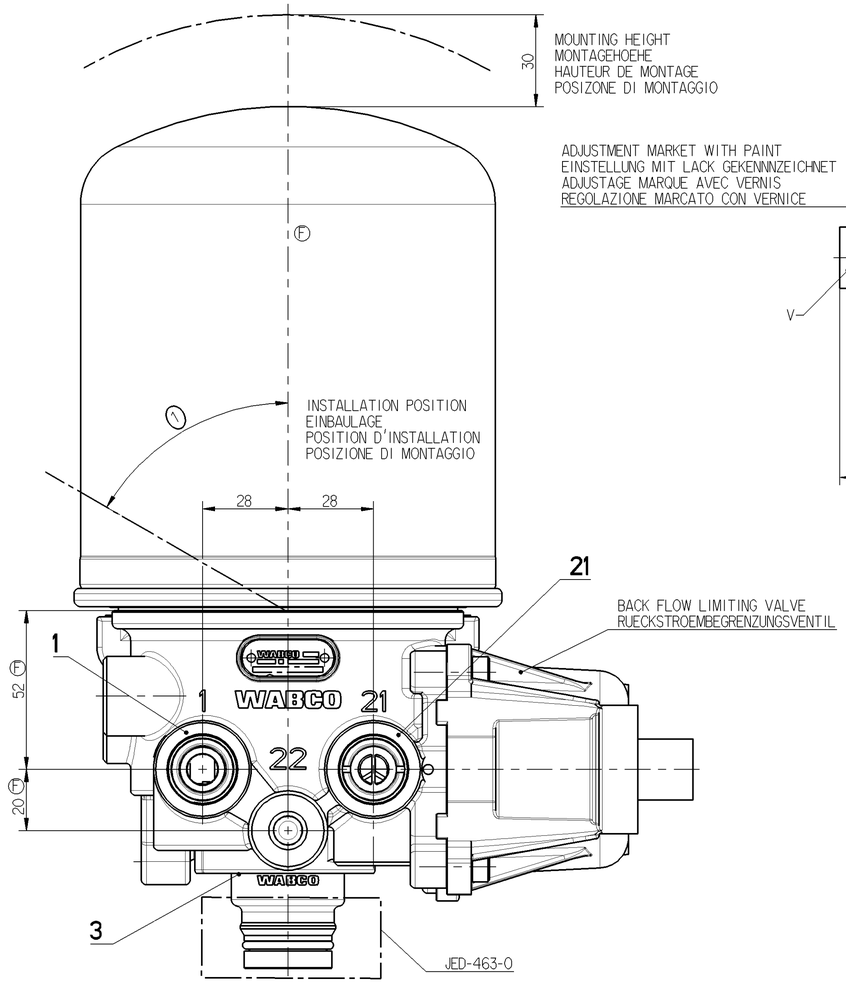

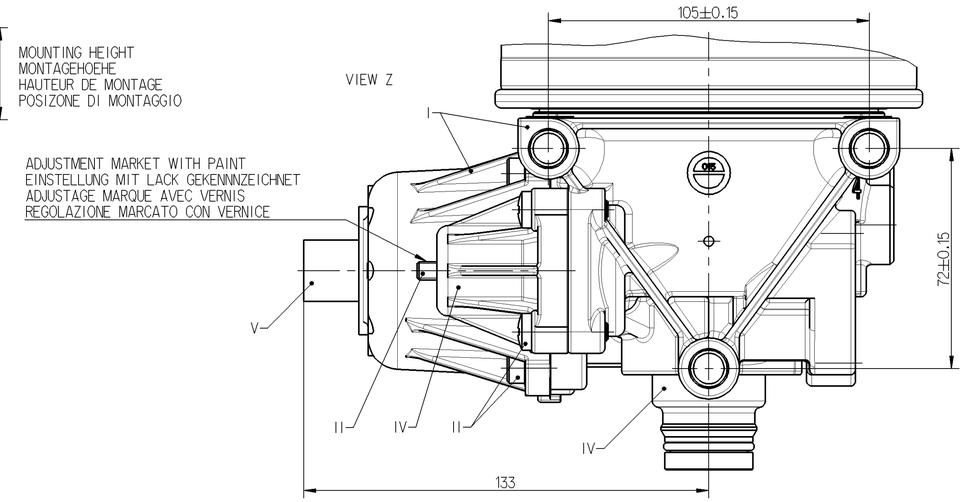

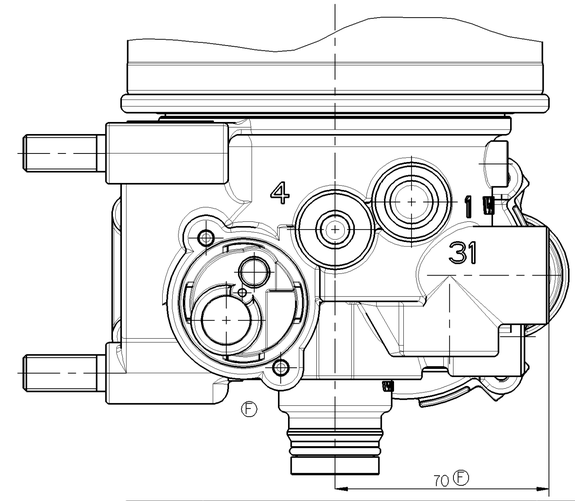

Ⓕ PORT ANSCHLUSS ORIFICE ORIFIZIO	FUNCTION FUNCTION FONCTION FUNZIONE	THREAD GEWINDE FILETAGE FILETTAURA
1	FROM THE COMPRESSOR VOM KOMPRESSOR PROVENANT DU COMPRESSEUR PROVENIENTE DEL COMPRESSORE	M22x1,5 JED-388
21	TO PROTECTION VALVE ZUM SCHUTZVENTIL AU VALVE DE PROTECTION A VALVOA DI PROTEZIONE	M22x1,5 JED-464.0
3	EXHAUST FOR COMPRESSED AIR ENTLUEFTUNG FUER DRUCKLUFT ECHAPPEMENT POUR AIR COMPRIME SCARICO PER AIRIA COMPRESSA	-

TECHNICAL DATA, TECHNISCHE DATEN, CARASTERISTIQUES TECHNIQUES, CARATTERISTICHE TECNICHE

THERMAL RANGE OF CONTINUOUS APPLICATION:
THERMISCHER DAUERANWENDUNGSBERREICH:
PLAGE DE TEMPERATURE EN UTILISATION CONTINUE:
COMPO DI APPICAZIONE CONTINUA: -40°C... +65°C

RESISTANCE TO HEAT:
WAERMEBESTAENDIGKEIT:
RESISTANCE A LA CHALEUR:
RESISTANZA AL CALORE: +80°C MAX

MEDIUM: COMPRESSED AIR
MEDIUM: DRUCKLUFT
FLUIDE: AIR COMPRIME
FLUIDO: ARIA COMPRESSA

WORKING PRESSURE:
BETRIEBSDRUCK:
PRESSION DE SERVICE:
PRESSIONE D' ESERCIZIO: Pe MAX = 13bar

MAX. PERMISSIBLE FREQUENCY
MAX. ZULAESSIGE FREQUENZ
MAX. ADMISSIBLE FREQUENZE
MAX. AMMISIBLE FREQUENZA 50 Hz

MAX. PERMISSIBLE ACCERELATION
MAX. ZULAESSIGE BESCHLINIGUNG
ACCELERATION MAX. ADMISSIBLE
ACCELERAZIONE MAX. AMMESA 10 g

INSTALLATION POSITION AS DRAWN
EINBAULAGE WIE GEZEICHNET
POSITION D' INSTALLATION SUIVANT DESSIN
POSIZIONE DI MONTAGGIO COME DISEGNATO

COMBINED UNLOADER:
DRUCKREGLER:
REGULATEUR DE PRESSION:
GRUPPO DI REGULAZIONE:

CUT OUT PRESSURE:
ABSCHALTDRUCK:
PRESSION D'OUVERTURE:
PRESSIONE D'APERTURA: $10^{+0.4}_{0}$ bar

OPERATING RANGE:
SCHALTSPANNE:
PLAGE DE REGULATTION:
GAMME DI REGULAZZIONE: $1^{+0.4}_{0}$ bar

DYNAMIC PRESSURE OF SAFETY VALVE:
STAUDRUCK DES SICHERHEITSVENTILES:
PRESSION DYNAMIQUE DU SOUPAPE DE SECURITE:
PRESSIONE DINAMICA DELLA VALVOLA DI SICUREZZA: 12^{+4}_{0} (BY $\mathring{V}n$ = 100 dm^3/min) bar Ⓕ

BACK FLOW LIMITING VALVE:
RÜCKSTROMBEGRENZUNGSVENTIL:
VALVE DE LIMITATION DE RETOUR:
VALVOLA LIMITATRICE DI RITORNO: 0,5±0.05 bar

TORQUES FOR CONNECTIONS:
ANZUNGSMOMENT FUER EINSCHRAUBSTUTZEN: M22x1.5: Mmax = 53 Nm
COUPLE DE SARRAGE DES RACCORDS
COPPIA DI SERRAGGIO DEI RACCORDI:

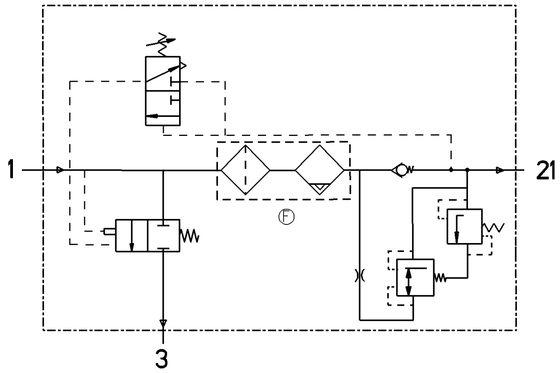

General Specification: JED-334-0					
Further Technical Data: Product Specification					
Doc. Code: 035		Sheet: 1 To 4			
General Tolerances JED-261					
Range of Nominal Dimensions (± mm)					
Class 1)	≤ 50	> 50 ≤ 180	> 180 ≤ 400	> 400	∢
Fine		0.5	1.0	1.5	2.0	
Medium	X	1.0	2.0	3.0	4.0	±3°
Coarse		2.0	3.5	5.0	6.5	
Tapped Holes acc.						
1) Tolerance Class Applied Crossmarked						

Copyright WABCO®

Date	Signature
Drawn 2012-05-17	Kurzynski
Checked 2012-07-10	Czapiewski
Expert Liter	

WABCO

AIR DRYER
LUFTTROCKNER
DESSICATEUR D' AIR
ESSICATORE D' ARIA

Mass	Scale	Material No.	Date of first issue: 1998-12-21		
4.96 KG	1:1	432 415 038 0	Doc.Code 005	Language ML	Sheet 1/1
Size A 1	CAD System Pro/E	ECN-No. 156567	Revision F x 14	Techn. Resp. 5055	Replacement for 884 702 778 0

100mm

Tout Communication ou reproduction de ce document, toute exploitation ou communication de son contenu sont interdites, sauf autorisation expresse. Tout manquement à cette règle constitue un abus envoyant à l'ignorance sont tenus au versement de dommages et intérêts. Tous droits réservés, notamment en cas de délivrance de brevet ou d'enregistrement d'un droit de protection.

Weitergabe sowie Vervielfältigung dieser Unterlage, Verwertung und Mitteilung ihres Inhalts nicht gestattet, soweit nicht ausdrücklich zugestanden. Zuwiderhandlungen ziehen einen Schadenersatzanspruch nach sich. Alle Rechte für den Fall der Patenterteilung oder Gebrauchsmustereintragung vorbehalten.

Non è permesso consegnare o farci a riprodurre questo documento, né utilizzare il contenuto o renderlo comunque noto a terzi. Ogni contravvenzione obbliga al risarcimento dei danni. Tutti i diritti riservati, in particolare quelli di brevetto o di registrazione di un modello di utilità.

Copying of this document and giving it to others and the use or communication of the contents thereof, are forbidden without express authority. Contravention of this restriction will constitute an evident abuse and result in a liability to the payment of damages. All rights are reserved in the event of the grant of a patent or the registration of a utility model or design. This document is the property of WABCO.

dm: 432415038 / 005 / Version 1 / 1999 / mb: 432415038 / 005 / Version 1 / 1999 / Jo