(1)	(2)
20°	20°
60°	0°

FIRST ANGLE PROJECTION

IDENTIFICATION		BACK FLOW LIMITING VALVE	COMBINED UNLOADER		SAFETY PRESSURE OF THE PURGE VALVE AT $\dot{V}_N$ = 100 dm³/
WABCO AIR DRYER	CUSTOMER NO.	dP = (bar)	CUT OUT PRESSURE Pe = (bar)	OPERATING RANGE dP = (bar)	
432 415 042 0		0.30 ±0.05	9.3 ±0.2	0.8 +0.4/0	14 $^{+3}_{0}$ bar

SURFACE PROTECTION OBERFLAECHENSCHUTZ PROTECTION DE SURFACE PROTEZIONE SUPERFICIALE	
I	JED-259
II	JED-256-1
III	JED-471 SCHWARZ/BLACK
IV	KUNSTSTOFF/PLASTIC
VI	JED-260

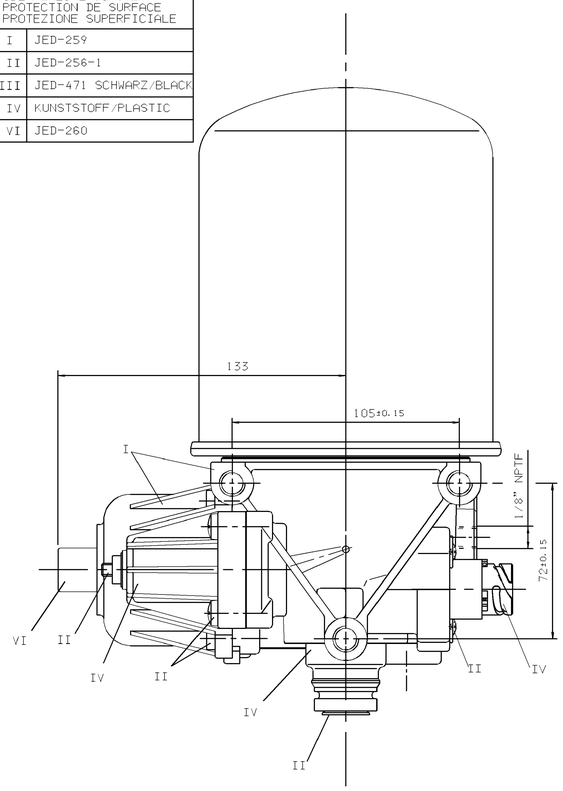

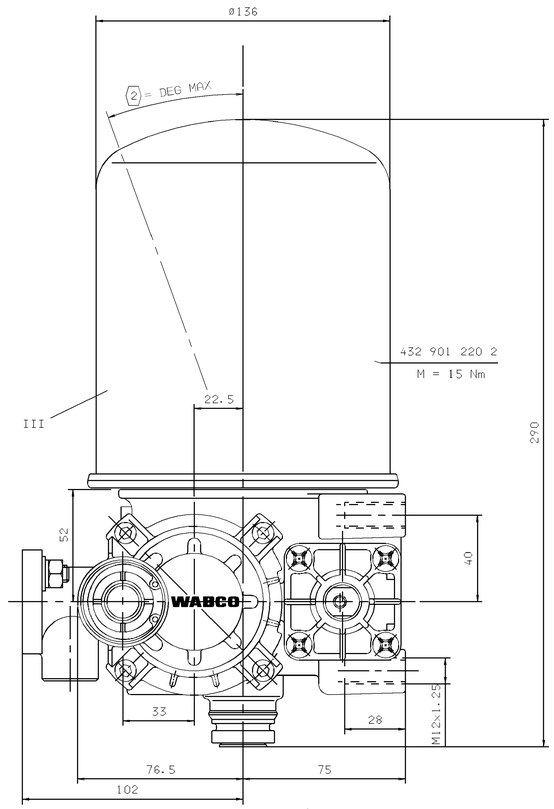

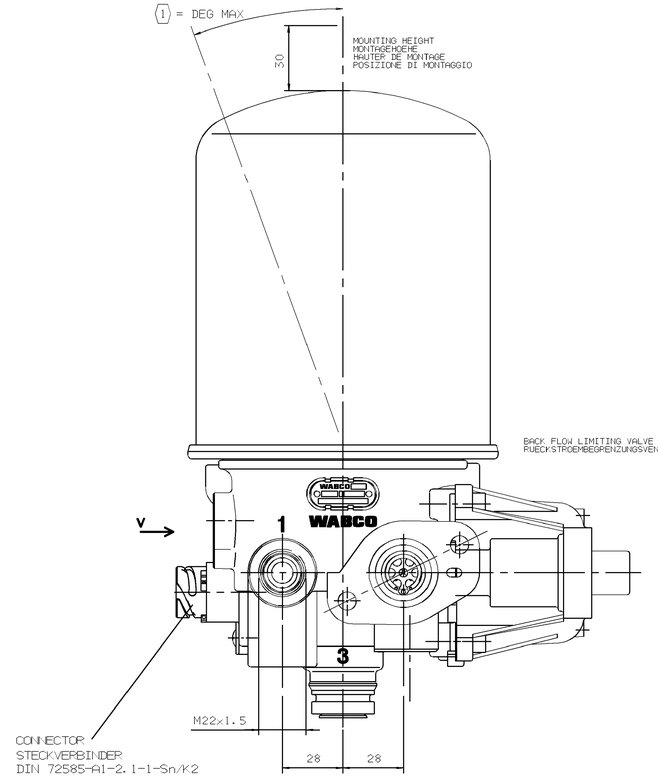

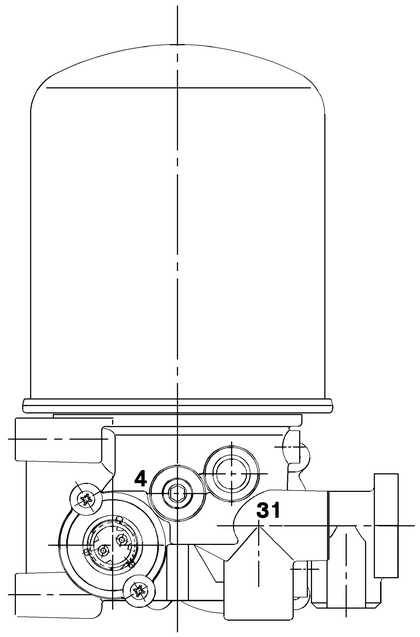

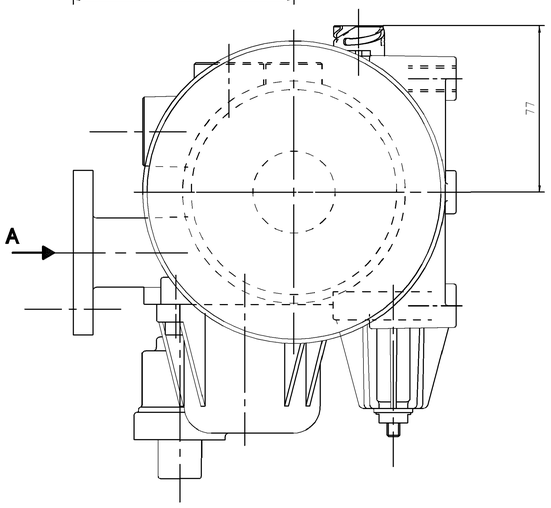

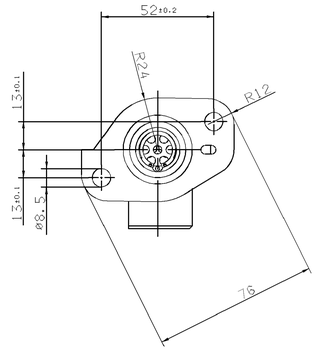

1 FROM THE COMPRESSOR
VOM LUFTPRESSER
PROVENANT DU COMPRESSEUR
PROVENIENTE DEL COMPRESSORE

(21) TO THE RESERVOIRS
ZU DEN LUFTBEHAELTERN
AUX RESERVOIR
AL SERBATOII PER

4/23 TO THE COMPRESSOR
ZUM KOMPRESSOR
AU COMPRESSEUR
AL COMPRESSORE

3 EXHAUST FOR COMPRESSED AIR
ENTLUEFTUNG FUER DRUCKLUFT
ECHAPPEMENT POUR AIR COMPRIME
SCARIO PER ARIA COMPRESSA

THERMAL RANGE OF CONTINUOUS APPLICATION
THERMISCHER DAUERANWENDUNGSBEREICH:
PLAGE DE TEMPERATURE EN UTILISATION CONTINUE: -40°C...+65°C
CAMPO DI APPLICAZIONE CONTINUA:

RESISTANCE TO HEAT:
WAERMEBESTAENDIGKEIT:
RESISTANCE A LA CHALEUR: MAX +80°C
RESISTANZA AL CALORE:

MEDIUM: COMPRESSED AIR
MEDIUM: DRUCKLUFT
FLUIDE: AIR COMPRIME
FLUIDO: ARIA COMPRESSA

WORKING PRESSURE:
BETRIEBSDRUCK:
PRESSION DE SERVICE: P_e max =13 bar
PRESSIONE D' ESERCIZIO:

INSTALLATION POSITION AS DRAWN
EINBAULAGE WIE GEZEICHNET
POSITION D' INSTALLATION SUIVANT DESSIN
POSIZIONE DI MONTAGGIO COME DISEGNATO

MAX. PERMISSIBLE ACCELERATION:
MAX. ZULAESSIGE BESCHLEUNIGUNG: ±10 g
ACCELERATION MAX. ADMISSIBLE:
ACCELERAZIONE MAX AMMESSA:

MAX. PERMISSIBLE FREQUENCY
MAX. ZULAESSIGE FREQUENZ
MAX. ADMISSIBLE FREQUENCE 50 Hz
MAX. AMMISSIBLE FREQUENZA

TORQUE FOR CONNECTIONS:
ANZUGSMOMENT FUER EINSCHRAUBSTUTZEN: M22x1.5 = 53 Nm
COUPLE DE SERRAGE DES RACCORDS:
COPPIA DI SERRAGGIO DEI RACCORDI:

HEATING:
HEIZUNG:
CHAUFFAGE:
RISCALDAMENTO:

CUT-IN TEMPERATURE
EINSCHALT-TEMPERATUR 7°±6°C
TEMPERATURE DE FERMETURE
TEMPERATURA DI CHIUSURA

CUT-OFF TEMPERATURE
AUSSCHALT-TEMPERATUR 29.5°±3°C
TEMPERATURE DE MISE
TEMPERATURA DI APERTURA

BATTERY VOLTAGE:
BATTERIESPANNUNG:
TENSION DE BATTERIE: $24\ ^{+4.8}_{-2.4}$ V DC
TENSIONE DI BATTERIA:

POWER:
LEISTUNG: 100 W
PUISSANCE:
POTENZA:

WITHOUT CURRENT
STROMLOS $95\ ^{0}_{-5}$ W
SANS COURANT
SENZA CORRENTE

WITH
BEI
AVEC 24 V DC
CON

APPLIED ACROSS THE HEATER CONTACTS
DIREKT AN DEN HEIZUNGSKONTAKTEN
APPLIQUEE SUR LES CONTACTS DE CHAUFFAGE
APPLICATA SULLE CONTATTI DI RISCALDAMENTO

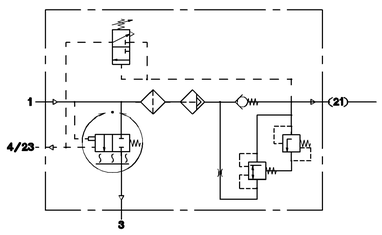

DRAWING OBSOLETE
DEVICE ON TABLE
DRAWING 432 415 044 0

DIMENSIONS IN MILLIMETRES

DRAWING PRODUCED ON CADAM
MANUAL CHANGES PROHIBITED

FURTHER TECHNICAL DATA SEE
IDENTIFICATION No.:
CODE FOR DOCUMENT: SHEET: TO

GENERAL TOLERANCES

CLASS	(1)	RANGE OF NOMINAL DIMENSIONS (mm) ≤50	>50 ≤180	>180 ≤400	>400	∠
I		0.5	1	1.5	2	
II	X	1	2	3	4	±5°
III		2	3.5	5	6.5	

L			
K			
J			
H			
G			
F			
E			
D			
C	02-10-03	302493	
B	20-08-03	302451	
A			

(1) TOLERANCE CLASS APPLIED CROSSWAYED

ECN-No. REV DATE

COPYRIGHT
DATE SIGNATURE

DRAWN 20-08-03 HARDING
CHECKED 20-08-03 STREHLOW
EXPERT CODE 310

WABCO

AIR DRYER
LUFTTROCKNER
DESSICATEUR D'AIR
ESSICATORE D'ARIA

MASS	SCALE	PRODUCT SPECIFICATION No.	DOCUMENT CODE	SHEET
5.0 +0	1 : 1	432 415 042 0	605	1/1
SIZE	T.R.L.			
A0	300			

PROD. GROUP	SHAPE CODE	PRODUCT TYPE	REPLACEMENT FOR
5055		003	

100 mm