PART CODE	MATERIAL	SURFACE PROTECTION	①	②
I	ALUMINIUM ALLOY	CHROMATED	20°	20°
II	STEEL	ZINK PLATED		
III	STEEL	PAINTED	0°	60°
IV	PLASTIC	NO TREATMENT		
V	BRASS	TIN AND COPPER COATING		
VI	ZINC ALLOY	PASSIVATION		
VII	STELL	PHOSPHATING AND OILING		
VIII	ALUMINIUM ALLOY	ANODISED		

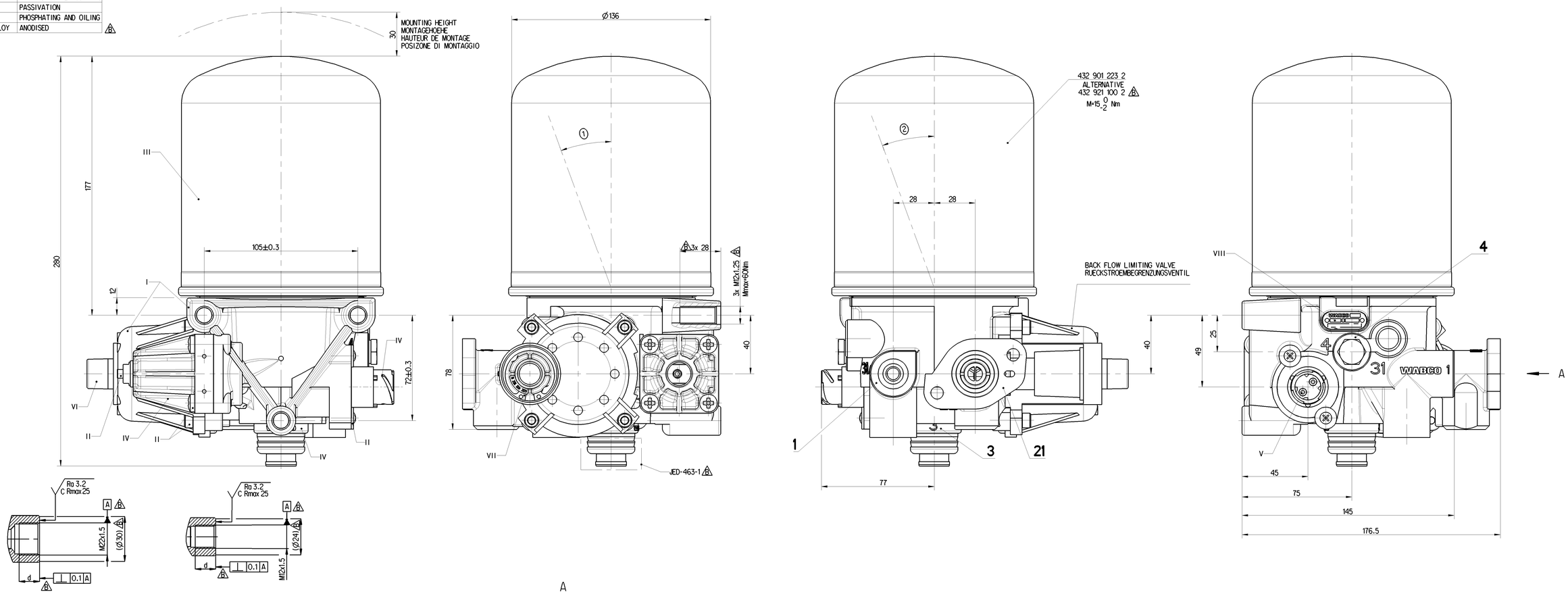

PORT ANSCHLUSS ORIFICE ORIFIZIO	FUNCTION FUNCTION FONCTION FUNZIONE	THREAD GEWINDE FILETAGE FILETTAURA
1	FROM THE COMPRESSOR VOM KOMPRESSOR PROVENANT DU COMPRESSEUR PROVENIENTE DEL COMPRESSORE	M22x1,5 d=15 +0.5 0
21	TO PROTECTION VALVE ZUM SCHUTZVENTIL AU VALVE DE PROTECTION A VALVOA DI PROTEZIONE	M22x1,5 d=45.3 +1 0
4	TO THE COMMPRESSOR (PLUGGED) ZUM KOMPRESSOR (VERSCHLOSSEN) AU COMPRESSEUR (OBTURE) AL COMPRESSORE (OTTURATO)	M12x1,5 d=12
3	EXHAUST FOR COMPRESSED AIR ENTLUEFTUNG FUER DRUCKLUFT ECHAPPEMENT POUR AIR COMPRIME SCARICO PER ARIA COMPRESSA	

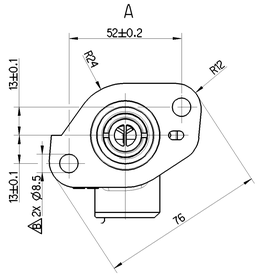

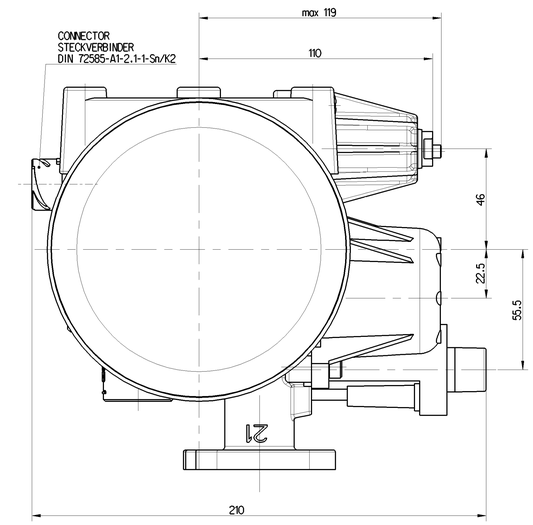

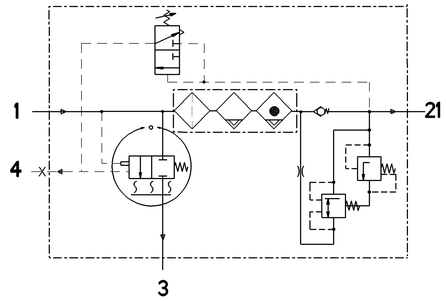

TECHNICAL DATA, TECHNISCHE DATEN, CARASTERISTIQUES TECHNIQUES, CARATTERISTICHE TECNICHE

THERMAL RANGE OF CONTINUOUS APPLICATION:
THERMISCHER DAUERANWENDUNGSBERREICH:
PLAGE DE TEMPERATURE EN UTILISATION CONTINUE:
COMPO DI APPICAZIONE CONTINUA: -40°C... +65°C

RESISTANCE TO HEAT:
WAERMEBESTAENDIGKEIT:
RESISTANCE A LA CHALEUR:
RESISTANZA AL CALORE: +80°C MAX

MEDIUM: COMPRESSED AIR
MEDIUM: DRUCKLUFT
FLUIDE: AIR COMPRIME
FLUIDO: ARIA COMPRESSA

WORKING PRESSURE:
BETRIEBSDRUCK:
PRESSION DE SERVICE:
PRESSIONE D' ESERCIZIO: Pe MAX = 10 bar

MAX. PERMISSIBLE FREQUENCY
MAX. ZULAESSIGE FREQUENZ
MAX. ADMISSIBLE FREQUENZE
MAX. AMMISIBLE FREQUENZA 50 Hz

MAX. PERMISSIBLE ACCERELATION
MAX. ZULAESSIGE BESCHLINIGUNG
ACCELERATION MAX. ADMISSIBLE
ACCELERAZIONE MAX. AMMESA 10 g

INSTALLATION POSITION AS DRAWN
EINBAULAGE WIE GEZEICHNET
POSITION D' INSTALLATION SUIVANT DESSIN
POSIZIONE DI MONTAGGIO COME DISEGNATO

HEATING
HEIZUNG
CHAUFFAGE
RISCALDAMENTO

HEATING CUT-IN TEMPERATURE:
HEIZUNG EINSCHALT-TEMPERATUR
CHAUFFAGE TEMPERATURE DE FERMETURE:
RISCALDAMENTO TEMPERATURA DI CHIUSURA: 7° ±6°C

HEATING CUT-OFF TEMPERATURE:
HEIZUNG AUSSCHALT-TEMPERATUR:
CHAUFFAGE TEMPERATURE DE MISE:
RISCALDEMENTO TEMPERATURA DI APERTURA: 29.5° ±3°C

BATTERY VOLTAGE:
BATTERIESPANNUNG:
TENSION DE BATTERIE:
TENSIONE DI BATTERIA: 24.0 +4.8/-2.4 VDC

POWER WITHOUT CURRENT:
LEISTUNG STROMLOS:
PUISSANCE SANS COURANT:
POTENZA SENZA CORRENTE: 100 W

POWER WITH 12V DC:
LEISTUNG BEI 12V DC:
PUISSANCE AVEC 12V DC:
POTENZA CON 12V DC: 95 +0/-5W

COMBINED UNLOADER:
DRUCKREGLER:
REGULATEUR DE PRESSION:
GRUPPO DI REGULAZIONE:

CUT OUT PRESSURE:
ABSCHALTDRUCK:
PRESSION D'OUVERTURE:
PRESSIONE D'APERTURA: 9.5 ±0.2 bar

OPERATING RANGE:
SCHALTSPANNE:
PLAGE DE REGULATTION:
GAMME DI REGULAZZIONE: 0.8 +0.4 bar

DYNAMIC PRESSURE OF SAFETY VALVE:
STAUDRUCK DES SICHERHEITSVENTILES:
PRESSION DYNAMIQUE DU SOUPAPE DE SECURITE:
PRESSIONE DINAMICA DELLA VALVOLA DI SICUREZZA: 14 +3 bar (BEI $\dot{V}n$ = 100 dm^3/min)

BACK FLOW LIMITING VALVE:
RÜCKSTROMBEGRENZUNGSVENTIL:
VALVE DE LIMITATION DE RETOUR:
VALVOLA LIMITATRICE DI RITORNO: 0.55 ±0.05 bar

TORQUES FOR CONNECTIONS:
ANZUNGSMOMENT FUER EINSCHRAUBSTUTZEN: M12x1.5: Mmax = 21 Nm
COUPLE DE SARRAGE DES RACCORDS M22x1.5: Mmax = 53 Nm
COPPIA DI SERRAGGIO DEI RACCORDI:

General Specification: ISO 8015, JED-334-1, Size ISO 14405 LP							
Further Technical Data, Product Specification							
Doc. Code: 035				Sheet: 1 To 4			
General Tolerances JED-261							
		Range of nominal dimensions in mm					
Class 1)		> 0 ≤ 50	> 50 ≤ 180	> 180 ≤ 400	> 400		
Fine		±0,5	±1	±1,5	±2	±3°	
Medium	X	±1	±2	±3	±4		
Coarse		±2	±3,5	±5	±6,5		
Tapped Holes acc. JED-152							
1) Tolerance Class Applied Crossmarked							

Copyright WABCO®

Date	Signature	
2022-09-29	Drawn: Meng	
2022-09-30	Checked: Kastrzewo	

Dimensions in mm

Mass kg	Scale	Material No.	Doc.Code	Language	Sheet
5.0	1:1	432 415 061 0	005	ML	1/1
Size	CAD System	EDB No. / Revision / Techn. Resp.	Date of first issue: 2010-04-12		
A 0	CREO	504504 / 14 / B / 5050	Replacement for		

WABCO

AIR DRYER
LUFTTROCKNER
DESSICATEUR D'AIR
ESSICATORE D'ARIA

100mm