PART CODE	MATERIAL	SURFACE PROTECTION
I	ALUMINIUM ALLOY	CHROMATED
II	STEEL	ZINC PLATED
III	STEEL	PAINTED
IV	PLASTIC	NO TREATMENT
V	ZINC	PASSIVATION

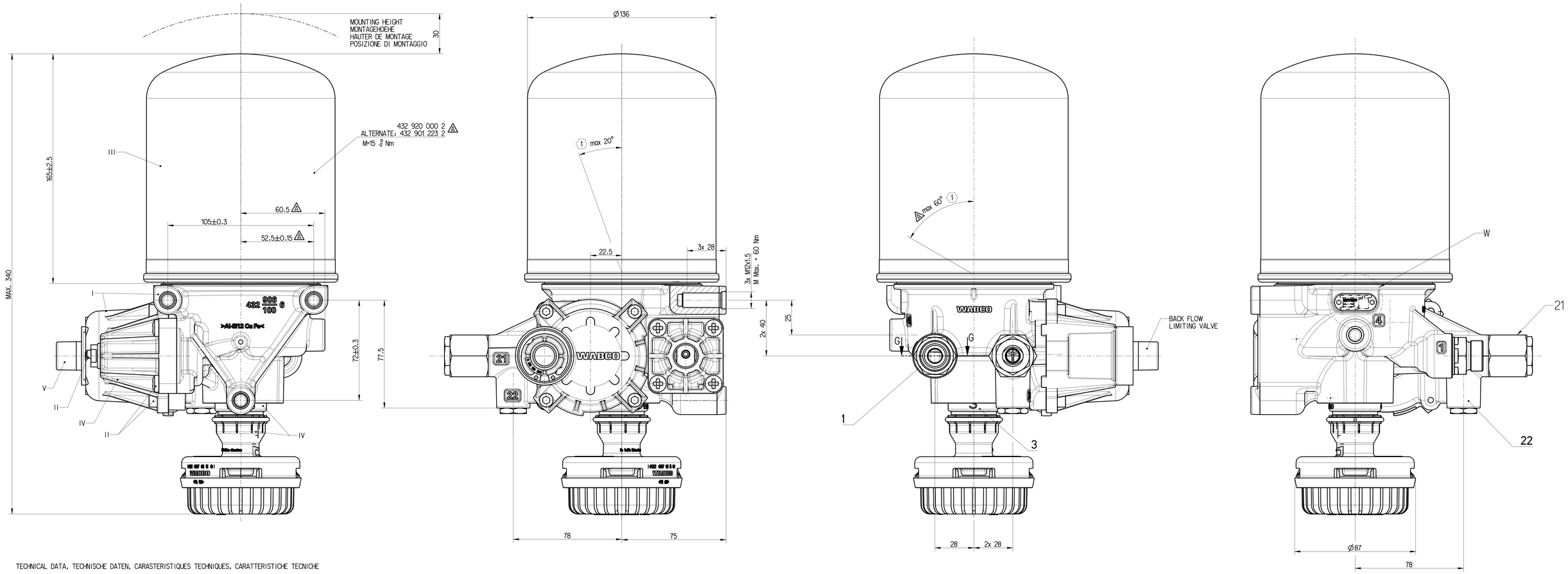

TECHNICAL DATA, TECHNISCHE DATEN, CARASTERISTIQUES TECHNIQUES, CARATTERISTICHE TECNICHE

COMBINED UNLOADER:
DRUCKREGLER:
REGULATEUR DE PRESSION:
GRUPPO DI REGULAZIONE:

CUT OUT PRESSURE:
ABSCHALTDRUCK: 10.6 ±0.2 bar
PRESSION D'OUVERTURE:
PRESSIONE D'APERTURA:

OPERATING RANGE:
SCHALTSPANNE: 0.9 +0.5/0 bar
PLAGE DE REGULATTION:
GAMMI DI REGULAZZIONE:

DYNAMIC PRESSURE OF SAFETY VALVE:
STAUDRUCK DES SICHERHEITSVENTILES: 13 +4/0 bar (BY Vn=100 dm^3/min.)
PRESSION DYNAMIQUE DU SOUPAPE DE SECURITE:
PRESSIONE DINAMICA DELLA VALVOLA DI SICUREZZA:

BACK FLOW LIMITING VALVE:
RUCKSTROMBERGENZUNGSVENTIL: (0.4 x OR) ±0.05 bar
VALVE DE LIMITATION DE RETOUR:
VALVOLA LIMITATRICE DI RITRONO:

TORQUES FOR CONNECTIONS:
ANZUNGSMOMENT FUER EINSCHRAUBSTUTZEN:
COUPLE DE SARRAGE DES RACCORDS:
COPPIA DI SERRAGGIO DEI RACCORDI:
M16x1.5: Mmax = 35 Nm
M22x1.5: Mmax = 53 Nm
VOSS 230 SYSTEM
M22x1.5 : Mmax = 10 Nm

THERMAL RANGE OF CONTINUOUS APPLICATION:
TERMISCHER DAUERANWENDUNGSBERREICH: -40°C ... +65 °C
PLAGE DE TEMPERATURE EN UTILISATION CONTINUE:
COMPO DI APPICAZIONE CONTINUA:

RESISTANCE TO HEAT:
WAERMEBESTAENDIGKEIT: +80°C max
RESISTANCE A LA CHALEUR:
RESISTANZA AL CALORE:

MEDIUM: COMPRESSED AIR
MEDIUM: DRUCKLUFT
FLUIDE: AIR COMPRIME
FLUIDO: ARIA COMPRESSA

WORKING PRESSURE:
BETRIEBSDRUCK: Pe max=13 bar
PRESSION DE SERVICE:
PRESSIONE D' ESERCIZIO:

MAX. PERMISSIBLE ACCELERATION
MAX. ZULASSIGE BESCHLEUNIGUNG ± 10 x g
ACCELERATION MAX. ADMISSIBLE
ACCELERAZIONE MAX. AMMISSIBILE

MAX. PERMISSIBLE FREQUENCY
MAX. ZULASSIGE FREQUENZ 50Hz
MAX. ADMISSIBLE FREQUENZE
MAX. AMMISSIBILE FREQUENZA

(1) INSTALLATION POSITION AS DRAWN
EINBAULAGE WIE GEZEICHNET
POSITION D' INSTALLATION SUIVANT DESSIN
POSIZIONE DI MONTAGGIO COME DISEGNATO

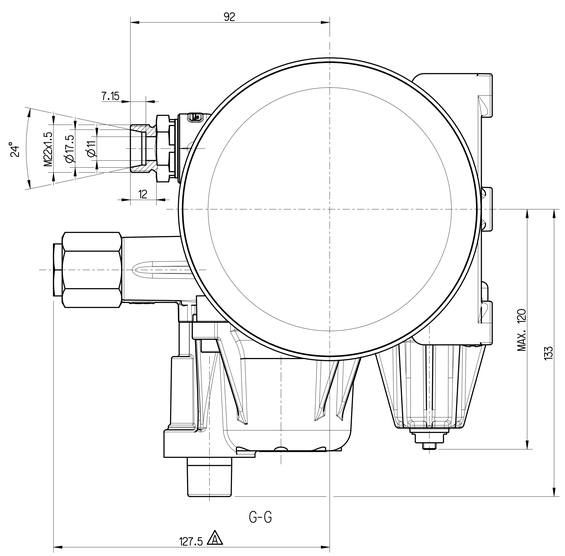

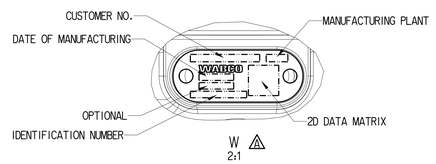

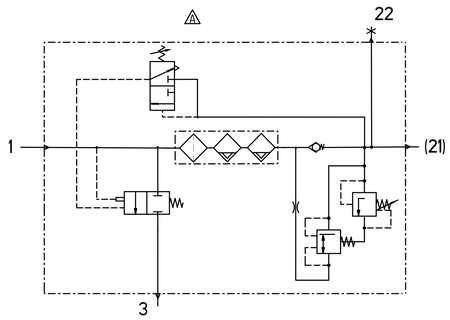

PORT ANSCHLUSS ORIFICE ORIFIZIO	FUNCTION FUNCTION FONCTION FUNZIONE	THREAD GEWINDE FILETAGE FILETTAURA
1	FROM THE COMPRESSOR VOM KOMPRESSOR PROVENANT DU COMPRESSEUR PROVENIENTE DEL COMPRESSORE	OUTER THREAD M22x1.5
21	TO THE RESERVOIRS ZU DEN LUFTBEHAEL TERN AUX RESERVOIR AL SERBATOII PER	M22x1.5 TO SUIT VOSS PLUG IN SYSTEM 230
22	TYRE INFLATION DEVICE - CLOSED REIFENFUELLANSCHLUSS - VERSCHLOSSEN PRISE POUR GONFLANGE PNEU - FERME PERSA PER GONFIAGGIA PNEUM - CHIUSO	M16x1.5 JED-388
3	EXHAUST FOR COMPRESSED AIR ENTLUEFTUNG FUER DRUCKLUFT ECHAPPEMENT POUR AIR COMPRIME SCARICO PER AIRIA COMPRESSA	SILENCER 4324070150

S.NO.	NOTES
1	SERVICE LIFE TO FIRST OVERHAUL IF FITTED AS PER RECOMMENDED LAYOUT 3 YEARS / 300000 km WHICHEVER IS EARLIER FOR TRUCK APPLICATION

Tale Comunicato, la riproduzione o la copiatura, sia integrale o parziale, di questo documento, ed utilizzo e contenuto vietato salvo ove autorizzato esplicito. Qualsiasi violazione sarà perseguita a norma di legge. Questo documento contiene informazioni proprietarie. Questo documento contiene informazioni proprietarie. Questo documento è proprietà di WABCO. Non è permesso riprodurre o fare copie di questo documento, ed utilizzare e comunicare il contenuto vietato salvo ove autorizzato esplicitamente. Qualsiasi violazione sarà perseguita a norma di legge. This document is the property of WABCO. Reproduction or copying of this document, use and communication of its contents forbidden without express authorization. Offenders will be held liable for the payment of damages. All rights are reserved in the event of the grant of a patent or registration of a utility model or design. This document is the property of WABCO. Reproduction or copying of this document, use and communication of its contents forbidden without express authorization. Offenders will be held liable for the payment of damages. All rights are reserved in the event of the grant of a patent or registration of a utility model or design. Ce document est la propriété de WABCO. Il ne peut être reproduit ni copié ni utilisé ni communiqué à des tiers sans autorisation. Tout contrevenant sera tenu à des dommages-intérêts. Tous droits sont réservés en cas de délivrance d'un brevet ou d'enregistrement d'un modèle d'utilité ou de dessin ou modèle.

General Specifications ISO 8015, JED-334-1, Size ISO 14405 LP								Copyright ZF®			
Further Technical Data: PRODUCT SPECIFICATION								Date	Signature		
Doc. Code: D35			Sheet: 1 To 4					Drawn 2026-01-09 Gopal		AIR DRYER	
General Tolerances JED-261								Checked 2026-01-12 Robok			
		Range of nominal dimensions in mm									
Class	11	≤ 50	> 50 ≤ 180	> 180 ≤ 400	> 400			Dimensions in mm			
Fine		±0.5	±1	±1.5	±2			Mass	Scale	Material No.	Date of first issue: 2018-08-07
Medium	X	±1	±2	±3	±4		±3°	4.3 kg	1:1 2:1	432 415 086 0	Doc.Code: D35 Language: ML Sheet: 1/1
Coarse		±2	±3.5	±5	±6.5			Size A 0	CAD System CREO		
Tapped Holes acc. JED-152 / JED-388								ECN-No.: 520531	Revision: 9x A	Techn. Reg.: 5050	Replacement for: -
11 Tolerance Class Applied Crossmarked											

100mm