EXTERNAL SURFACE AEUSSERE OBERFLAECHE SURFACE EXTERIEURE SUPERFICIE ESTERNA	
I	JED-259
II	SEE TABLE
III	JED-471 SCHWARZ/BLACK
IV	KUNSTSTOFF/PLASTIC
V	JED-570.656
VI	JED-260

IDENTIFICATION WABCO	CUSTOMERS NO. KUNDEN-NR. NO CLIENT CLIENTE	BACK FLOW LIMITING VALVE: RUECKSTROEMBEGR. VENTIL: Δp=(bar)	II SURFACE PROTECTION OBERFLAECHENSCHUTZ	1	2	3	4	BODY GEHAEUSE BOITIER CORPO (5)	THREAD GEWINDE FILETAGE FILETTATURA (10)	THREAD GEWINDE FILETAGE FILETTATURA (11)	6	12	HEATING HEIZUNG CHAUFFAGE RISCALDAMENTO (7)		DESICCANT CARTRIDGE TROCKENMITTELBEHAELTER CARTOUCHE DU DESSICCATEUR CARTUCCIA (8)	SILENCER GERAEUSCHDAEMPFER SILENCIEUX SILENZIATORE (9)	WORKING PRESSURE BETRIEBSDRUCK PRESSION DE SERVICE PRESSIONE D' ESERCTZIO $p_e$max.= (bar)	COMBINED UNLOADER, DRUCKREGLER, REGULATEUR DE PRESS., GRUPPO DI REGULAZIONE CUT OUT PRESSURE ABSCHALTDRUCK p_e=(bar) PRESSION DE DECLENCH. PRESSIONE D' APERTURA	OPERATING RANGE SCHALTSPANNE Δp=(bar) PLAGE DE REGULATION GAMME DE REGUL.	(kg) MASS MASSE MASSE MASSA
432 415 000 0		0.3 ±0.05	JED 256 or JED 256-1		X			432 410 024 2	M14x1.5/JED-464			X	894 260 040 2	24V==100W	432 410 020 2		13	8 +0.4/0	0.6 +0.5/0	4.98
432 415 002 0		0.3 ±0.05	JED 256 or JED 256-1		X			432 410 024 2	M14x1.5/JED-464				894 260 043 2	24V==100W	432 410 020 2		13	8 ±0.2	0.6 +0.4/0	4.98
432 415 003 0		0.3 ±0.05	JED 256 or JED 256-1	X				432 410 029 2				X	894 260 040 2	24V==100W	432 410 020 2		13	8 +0.4/0	0.6 +0.5/0	4.98
432 415 004 0		0.3 ±0.05	JED 256 or JED 256-1	X				432 901 011 2				X	894 260 040 2	24V==100W	432 410 220 2		18	16.5 0/-0.5	1.7 ±0.6	5.0
432 415 005 0		0.3 ±0.05	JED 256 or JED 256-1	X				432 410 029 2				X	894 260 040 2	24V==100W	432 410 020 2		13	9 +0.4/0	0.7 +0.5/0	4.98
432 415 006 0		0.4 ±0.05	JED 256 or JED 256-1	X				432 410 029 2					894 260 040 2	24V==100W	432 410 020 2	432 407 070 0	13	8.5 +0.4/0	0.7 +0.5/0	5.05
432 415 007 0		0.3 ±0.05	JED 256 or JED 256-1		X			432 410 024 2	M14x1.5/JED-464			X			432 410 020 2		13	8 +0.4/0	0.7 +0.5/0	4.95
432 415 010 0		0.5 ±0.05	JED 256-1	X				432 410 029 2				X	894 260 040 2	24V==100W	432 410 020 2		13	9 ±0.2	1.0 +0.5/0	4.98
432 415 012 0		0.3 ±0.05	JED 256 or JED 256-1			X		432 901 019 2		M12x1.5					432 410 020 2		13	9.5 ±0.2	0.7 +0.6/0	4.95
432 415 013 0		0.3 ±0.05	JED 256 or JED 256-1			X		432 901 019 2		M12x1.5		X	894 260 040 2	24V==100W	432 410 020 2	432 407 012 0	13	8.3 ±0.2	0.6 +0.5/0	5.05
432 415 014 0		0.35 ±0.05	JED 256 or JED 256-1			X		432 901 019 2		M12x1.5	X		894 260 040 2	24V==100W	432 410 020 2		13	8.3 +0.4/0	0.7 +0.5/0	4.98
432 415 016 0		0.3 ±0.05	JED 256 or JED 256-1			X		432 901 019 2		M12x1.5			894 260 040 2	24V==100W	432 410 020 2		13	11 ±0.2	0.7 +0.6/0	4.98
432 415 017 0		0.3 ±0.05	JED 256 or JED 256-1				X	432 410 031 2	M14x1.5/JED-464	M12x1.5			894 260 040 2	24V==100W	432 410 020 2		13	11 ±0.2	0.7 +0.6/0	4.98
432 415 019 0		0.5 ±0.05	JED 256 or JED 256-1			X		432 901 019 2		M12x1.5		X	894 260 040 2	24V==100W	432 410 020 2	432 407 012 0	13	12.5 0/-0.5	1.5 +0.3/-0.1	5.13
432 415 020 0		0.5 ±0.05	JED 256 or JED 256-1	X				432 410 029 2							432 410 020 2	432 407 012 0	13	12.5 0/-0.5	1.5 +0.3/-0.1	5.1
432 415 021 0		0.5 ±0.05	JED 256 or JED 256-1	X				432 410 029 2				X	894 260 040 2	24V==100W	432 410 020 2		13	9.5 ±0.2	0.7 +0.6/0	4.98
432 415 022 0		0.4 ±0.05	JED 256 or JED 256-1			X		432 901 019 2		M12x1.5		X	894 260 040 2	24V==100W	432 410 020 2		13	9.8 ±0.2	1.0 +0.5/0	4.98
432 415 027 0		0.5 ±0.05	JED 256 or JED 256-1	X				432 410 029 2				X	894 260 040 2	24V==100W	432 410 020 2	432 407 012 0	13	10 ±0.2	1.1 +0.2/-0.4	5.13
432 415 028 0		0.5 ±0.05	JED 256 or JED 256-1	X				432 410 029 2				X	894 260 040 2	24V==100W	432 410 020 2		13	8 +0.4/0	0.6 +0.5/-0	4.98
432 415 030 0		0.4 ±0.05	JED 256 or JED 256-1			X		432 901 019 2		M12x1.5		X	894 260 040 2	24V==100W	432 410 020 2		13	8.3 +0.4/0	0.93+0.27/0	4.98
432 415 032 0		0.4 ±0.05	JED 256 or JED 256-1			X		432 901 019 2		M12x1.5		X	894 260 044 2	12V==100W	432 410 020 2		13	8.3 +0.4/0	0.7 +0.5/0	4.98
432 415 034 0		0.3 ±0.05	JED 256 or JED 256-1			X		432 901 019 2		M12x1.5					432 410 020 2		13	8.5 ±0.2	0.7 +0.5/0	4.95
432 415 036 0		0.45 ±0.05	JED 256 or JED 256-1	X				432 410 029 2				X	894 260 040 2	24V==100W	432 410 020 2		13	8.1 +0.4/0	0.8 +0.4/0	4.98
432 415 037 0		0.4 ±0.05	JED 256 or JED 256-1			X		432 901 019 2		M12x1.5		X	894 260 049 2	24V==100W	432 410 020 2		13	8.3 +0.4/0	0.93+0.27/0	4.98
432 415 040 0		0.5 ±0.05	JED 256 or JED 256-1	X				432 410 029 2				X	894 260 049 2	24V==100W	432 410 020 2		13	8 +0.4/0	0.6 +0.5/-0	4.98

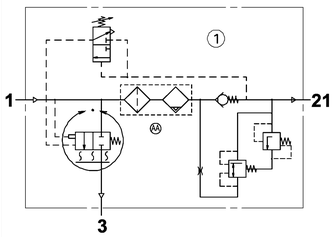

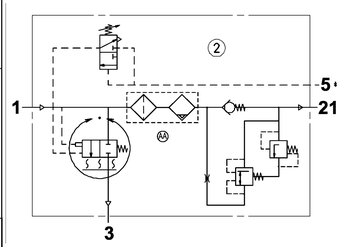

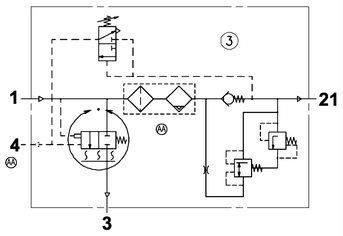

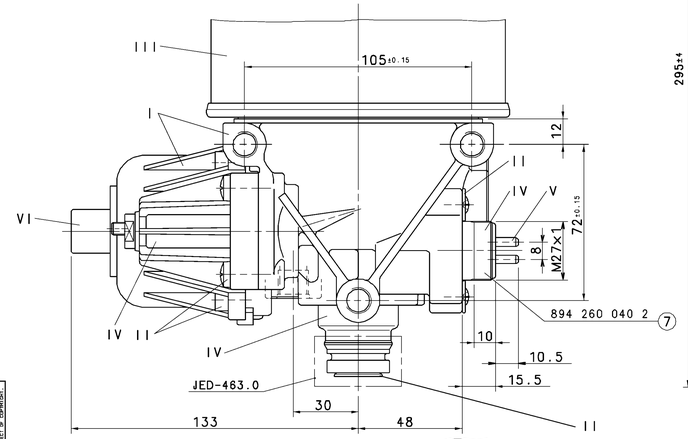

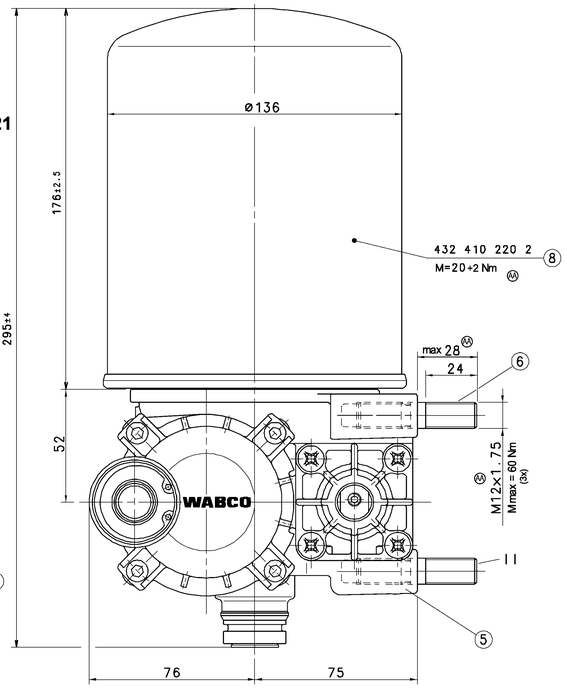

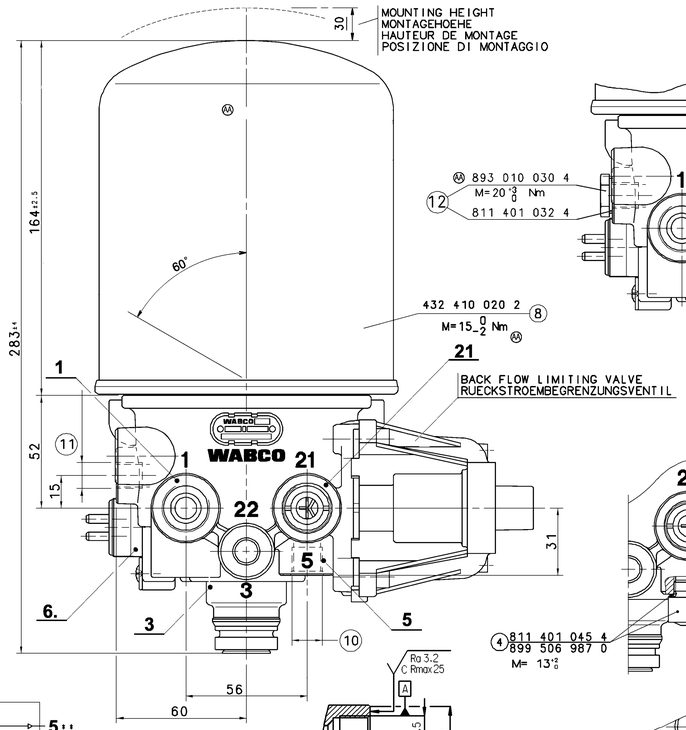

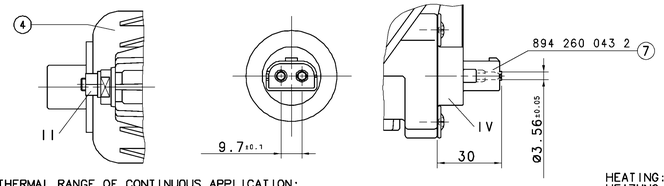

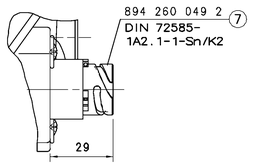

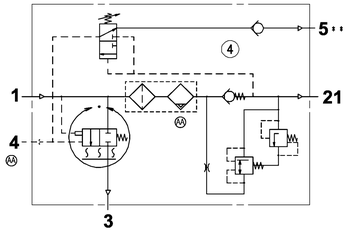

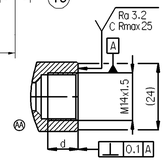

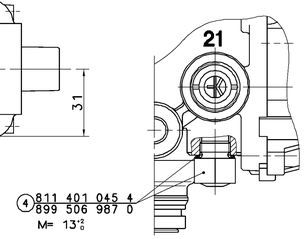

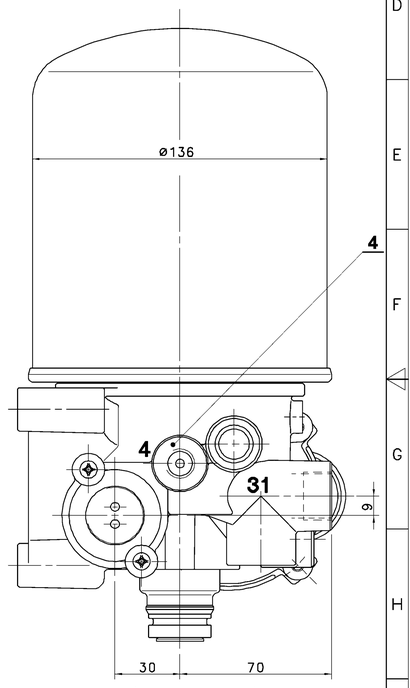

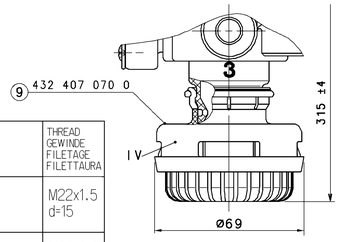

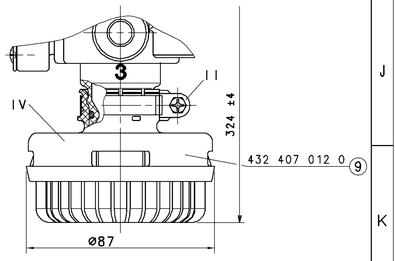

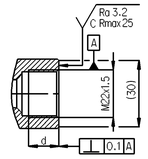

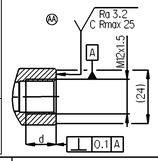

THERMAL RANGE OF CONTINUOUS APPLICATION:
THERMISCHER DAUERANWENDUNGSBEREICH:
PLAGE DE TEMPERATURE EN UTILISATION CONTINUE: -40°C....+65°C
COMPO DI APPLICAZIONE CONTINUA:

RESISTANCE TO HEAT:
WAERMEBESTAENDIGKEIT:
RESISTANCE A LA CHALEUR: MAX.+80°C
RESISTANZA AL CALORE:

MEDIUM: COMPRESSED AIR
MEDIUM: DRUCKLUFT
FLUIDE: AIR COMPRIME
FLUIDO: ARIA COMPRESSA

INSTALLATION POSITION AS DRAWN
EINBAULAGE WIE GEZEICHNET
POSITION D' INSTALLATION SUIVANT DESSIN
POSIZIONE DI MONTAGGIO COME DISEGNATO

MAX. PERMISSIBLE ACCLERATION:
MAX. ZULAESSIGE BESCHLEUNIGUNG:
ACCELERATION MAX. ADMISSIBLE: ±10xg
ACCELERAZIONE MAX. AMMESSA:

MAX. PERMISSIBLE FREQUENCY
MAX. ZULAESSIGE FREQUENZ
MAX. ADMISSIBLE FREQUENZE 50 Hz
MAX. AMMISSIBLE FREQUENZA

TORQUE FOR CONNECTIONS:
ANZUGSMOMENT FUER EINSCHRAUBSTUTZEN: M12×1.5: $M_{max.}$ = 21 Nm
COUPLE DE SERRAGE DES RACCORDS: M14×1.5: $M_{max.}$ = 25 Nm
COPPIA DI SERRAGGIO DEI RACCORDI: M22×1.5: $M_{max.}$ = 53 Nm

HEATING:
HEIZUNG:
CHAUFFAGE:
RISCALDAMENTO:

CUT-IN TEMPERATURE
EINSCHALT-TEMPERATUR
TEMPERATURE DE FERMETURE 7°±6°C
TEMPERATURA DI CHIUSURA

CUT-OFF TEMPERATURE
AUSSCHALT-TEMPERATUR
TEMPERATURE DE MISE 29.5°±3°C
TEMPERATURA DI APERTURA

BATTERY VOLTAGE:
BATTERIESPANNUNG:
TENSION DE BATTERIE: 24 +4.8 -2.4 V DC
TENSIONE DI BATTERIA:

POWER:
LEISTUNG:
PUISSANCE: 100 W
POTENZA:

WITHOUT CURRENT
STROMLOS
SANS COURANT
SENZA CORRENTE

95 0 -5 W

WITH
BEI
AVEC 24 V DC
CON

APPLIED ACROSS THE HEATER CONTACTS
DIREKT AN DEN HEIZUNGSKONTAKTEN
APPLIQUEE SUR LES CONTACTS DE CHAUFFAGE
APPLICATA SULLE CONTATTI DI RISCALDAMENTO

COMBINED UNLOADER: DRUCKREGLER: REGULATEUR DE PRESS.: GRUPPO DI REGULAZIONE:	CUT OUT PRESSURE ABSCHALTDRUCK PRESSION DE DECL. PRESSIONE D'APERT. (bar)	DYNAMIC PRESSURE OF THE SAFETY VALVE STAUDRUCK DES SICHERHEITSVENTILES PRESSION DYNAMIQUE DU SOUPAPE DE SECURITE PRESSIONE DINAMICA DELLA VALVOLA DI SICUREZZA (bar)
	7.1 ÷ 8.5	≤14.5
	8.6 ÷ 10.0	≤16
	10.1 ÷ 11.5	≤17.5
	11.6 ÷ 13.0	≤19
	13.1 ÷ 14.5	≤20.5
	14.6 ÷ 16.0	≤22
	16.1 ÷ 17.5	≤23.5

BEI $\dot{V}_n$=100dm³/min.

PORT ANSCHLUSS ORIFICE ORIFIZIO	FUNCTION FUNKTION FONCTION FUNZIONE	THREAD GEWINDE FILETAGE FILETTAURA
1	FROM THE COMPRESSOR VOM LUFTPRESSER PROVENANT DU COMPRESSEUR PROVENIENTE DEL COMPRESSORE	M22x1.5 d=15
21	TO THE RESERVOIRS ZU DEN LUFTBEHAELTERN AUX RESERVOIR AL SERBATOII PER	M22x1.5 JED-464
3	EXHAUST FOR COMPRESSED AIR ENTLUEFTUNG FUER DRUCKLUFT ECHAPPEMENT POUR AIR COMPRIME SCARIO PER ARIA COMPRESSA	SILENCER
4	TO COMPRESSOR ZUM KOMPRESSOR AU COMPRESSEUR A COMPRESSORE	M12x1.5 d=12
' 5	CONTROL PORT STEUERANSCHLUSS ORIFICE DE COMMANDE (2) ORIFIZIO DI COMANDO	M14x1.5 d=12
'' 5	EXHAUST FOR COMPRESSED AIR ENTLUEFTUNG FUER DRUCKLUFT ECHAPPEMENT POUR AIR COMPRIME (4) SCARIO PER ARIA COMPRESSA	
6.	HEATING HEIZUNG CHAUFFAGE RISCALDAMENTO	

General Specification: JED-334.0
Further Technical Data: Product Specification
Doc. Code: 035 Sheet: To

General Tolerances JED-261

Class 1)		Range of Nominal Dimensions (in mm)				
		≤ 50	> 50 ≤ 180	> 180 ≤ 400	> 400	
Fine		0.5	1.0	1.5	2.0	±3°
Medium	X	1.0	2.0	3.0	4.0	
Coarse		2.0	3.5	5.0	6.5	

Tapped Holes acc.
1) Tolerance Class Applied Crosshatched

Copyright WABCO

Date	Sign.	Dr.
2012 - 02 - 10		OBUSZYNSKI
2013 - 02 - 14		LITER

Approved: LITER

WABCO

AIR DRYER
LUFTTROCKNER
DESSICATEUR D'AIR
ESSICATORE D' ARIA

Material No. 432 415 900 0

Mass	Scale	Size	CAD System	Total	Revision	Tech. Reg.	No. of this issue:	Sheet	Replacement for
	1:1	A0	TIF	156670	17x AA	5050	053	ML 1/1	432 415 900 0 GP 86-12-19