PART CODE	MATERIAL	SURFACE PROTECTION
I	ALUMINIUM ALLOY	CHROMATED
II	STEEL	ZINC PLATED
III	PLASTIC	NO TREATMENT
IV	RUBBER	NO TREATMENT
V	STEEL	PHOSPHATIZED

<CI> CUSTOMER INTERFACE 14

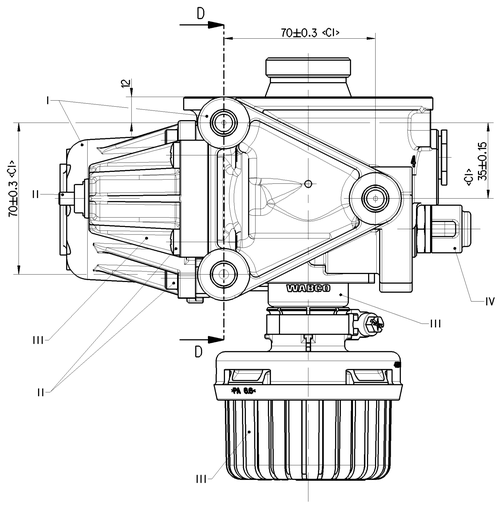

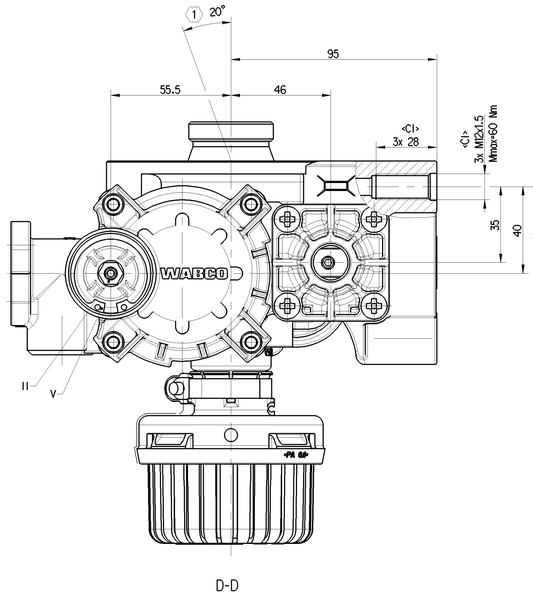

D-D

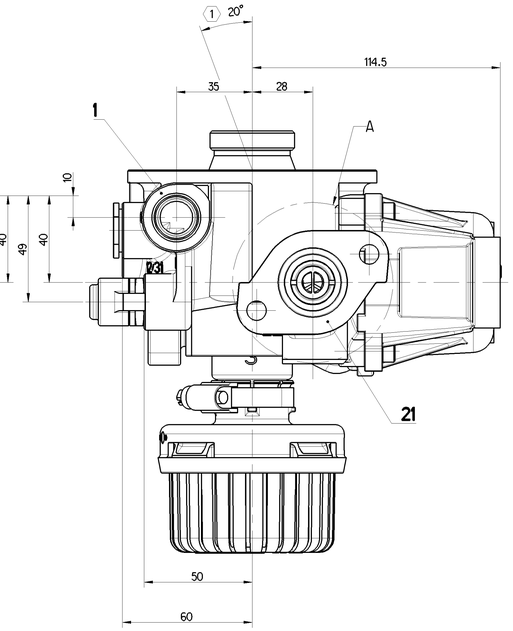

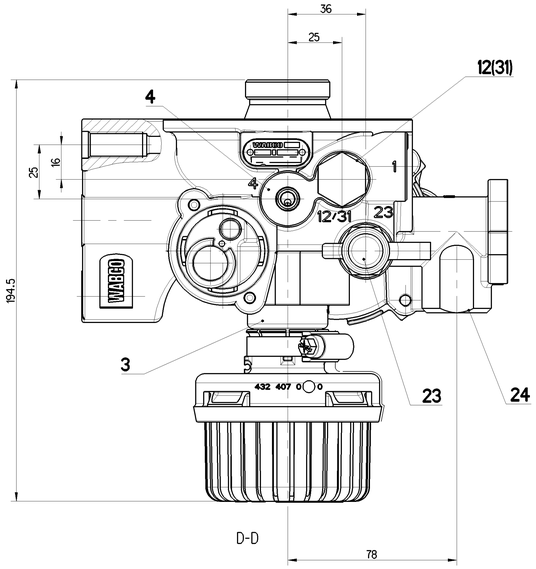

D-D

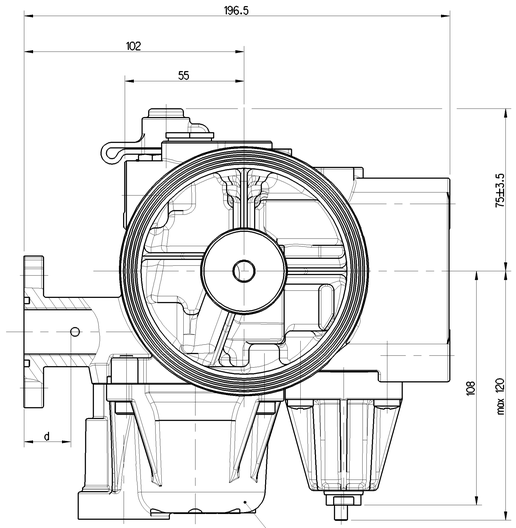

E-E

BACK FLOW LIMITING VALVE

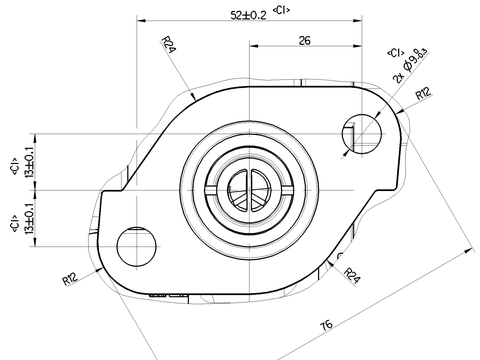

A
2:1

PORT	FUNCTION	THREAD	TORQUE
1	FROM THE COMPRESSOR	<CI>M22x1,5 JED-152 d=15	Mmax = 53 Nm
12/(31)	EXTERNAL FILLING CLOSED	M16x1,5 JED-152	Mmax = 34 Nm
21	TO PROTECTION VALVE	<CI>M22X1.5 JED-152 d=21.5	Mmax = 53 Nm
23	TIRE INFLATION DEVICE	<CI>M16x1.5 JED-388-3	Mmax = 34 Nm
24	TO AIR SUSPENSION RESERVOIR	<CI>M16x1.5 JED-388	Mmax = 34 Nm
3	EXHAUST FOR COMPRESSED AIR	SILENCER 432 407 019 0	
4	TO THE COMPRESSOR	<CI> M10x1 JED-388-1	Mmax = 13 Nm

TECHNICAL DATA

THERMAL RANGE OF CONTINUOUS APPLICATION: -40°C....+65°C

RESISTANCE TO HEAT: MAX. +80°C

MEDIUM: COMPRESSED AIR

WORKING PRESSURE: PeMAX. = 13bar

INSTALLATION POSITION AS DRAWN: (1)

COMBINED UNLOADER

CUT OUT PRESSURE: 11.1 ± 0.2bar

OPERATING RANGE: 1.4 ± 0.2 bar

BACK FLOW LIMITING VALVE: dp = (ORx0.50) ±0.05 bar

SAFETY VALVE

OPENING PRESSURE: 13^{+4}_{0} bar

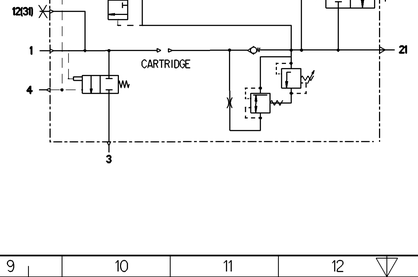

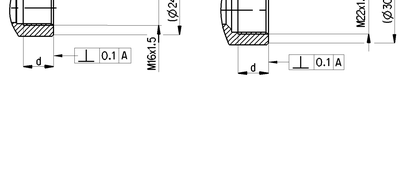

General Specification: ISO 8015, JED-334-1, Size ISO 14405 LP								
Further Technical Data: 432 417 106 2								
Doc. Code: 035							Sheet: 1 To 4	
General Tolerances JED-261								
		Range of nominal dimensions in mm						
Class 1)		≥ 50	> 50 ≤ 180	> 180 ≤ 400	> 400			
Fine		±0.5	±1	±1.5	±2			
Medium	X	±1	±2	±3	±4		±3°	
Coarse		±2	±3.5	±5	±6.5			
Tapped Holes acc. JED-152 / JED-388								
1) Tolerance Class Applied Crosswarded								

Copyright WABCO®

Date	Signature
Drawn 2022-01-06	Oliveira
Checked 2022-01-12	Kosiarzewa

Dimensions in mm

Mass	Scale
2.261 kg	1:1 (2:1)

Size A 0 | CAD System CREO

WABCO

AIR DRYER

Material No.: 432 417 106 2

Date of first issue: 2022-01-12

Doc.Code	Language	Sheet
005	EN	1/1

EDB No.	Revision	Techn. Prod.	Replacement for
-	-	5550	-

100mm

Tado documento ou reprodução de o duplicar, bem como a utilização do seu conteúdo não autorizada, não é permitida e poderá conter sujeito a pedido de indemnização. Todos os direitos reservados, quer relativos a patentes, quer a modelos de utilidade, marcas ou desenhos ou modelos.
Dieses Dokument darf ohne unsere ausdrückliche Genehmigung weder vervielfältigt noch an Dritte weitergegeben werden. Es ist urheberrechtlich geschützt. Der Inhalt darf weder für den Wettbewerb noch für die Verbreitung im Ausland zu Zwecken verwendet werden, die unseren berechtigten Interessen schaden.
This document may not be reproduced or disclosed to third parties without our express consent. It is copyrighted. Its contents may neither be used in competition nor be made available abroad for purposes which would be detrimental to our legitimate interests.