EXTERNAL SURFACE AEUSSERE OBERFLAECHE SURFACE EXTERIEURE SUPERFICIE ESTERNA	
I	JED-259
II	JED-256
III	JED-471
IV	PLASTIC / KUNSTSOFF

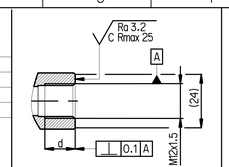

DETAILS OF PRT MACHINING FOR M12x1.5

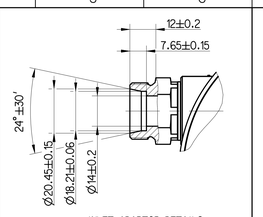

INLET ADAPTOR DETAILS

◇	SAFETY CHARACTERISTICS	0
◇	SIGNIFICANT CHARACTERISTICS	0
◇CI◇	CUSTOMER INTERFACE	0

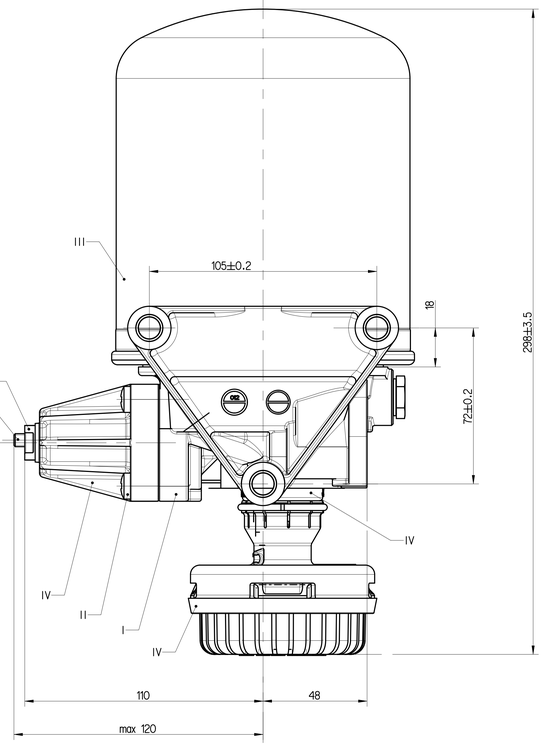

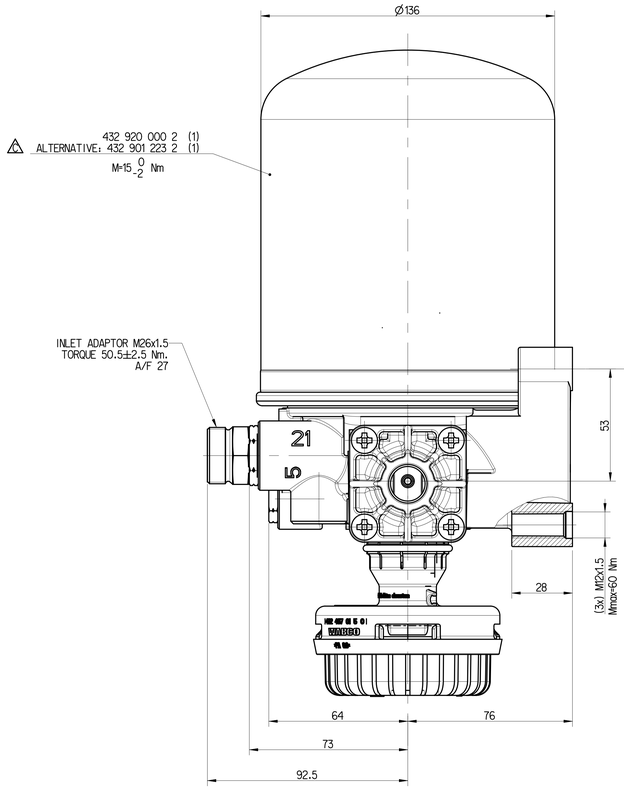

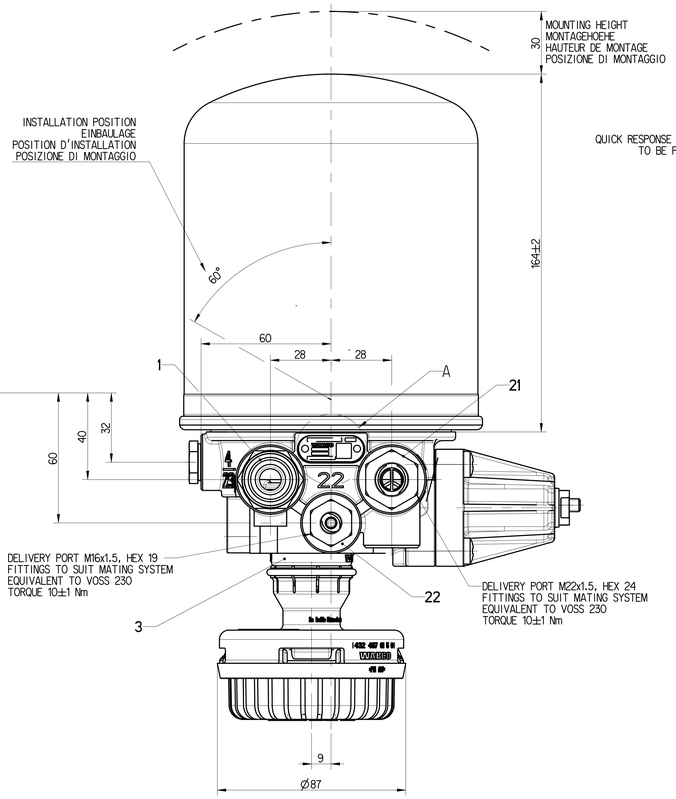

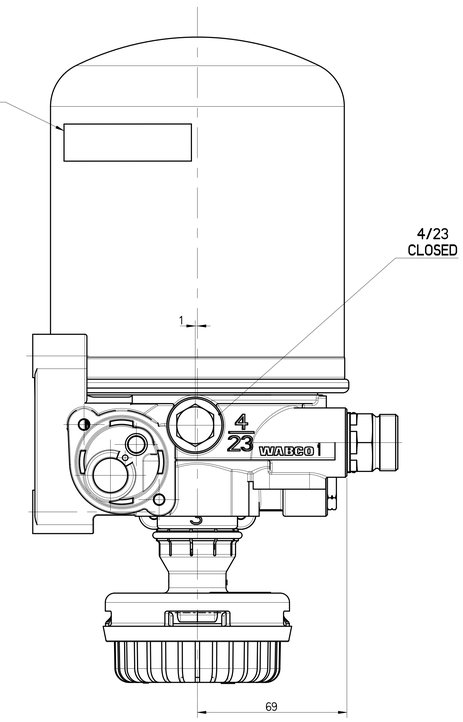

TECHNICAL DATA: / TECHNISCHE DATEN: / CARACTERISTIQUES TECHNIQUES: / CARATTERISTICHE TECNICHE:

THERMAL RANGE OF CONTINUOUS APPLICATION:
THERMISCHER DAUERANWENDUNGSBEREICH:
PLAGE DE TEMPERATURE EN UTILISATION CONTINUE:
COMPO DI APPLICAZIONE CONTINUA: -40°C....+65 °C

RESISTANCE TO HEAT:
WAERMEBESTAENDIGKEIT:
RESISTANCE A LA CHALEUR:
RESISTANZA AL CALORE: max +80 °C

MEDIUM: COMPRESSED AIR
MEDIUM: DRUCKLUFT
FLUIDE: AIR COMPRIME
FLUIDO: ARIA COMPRESSA

WORKING PRESSURE:
BETRIEBSDRUCK:
PRESSION DE SERVICE:
PRESSIONE D' ESERCIZIO: P_e max=13 bar

MAX. PERMISSIBLE FREQUENCY
MAX. ZULAESSIGE FREQUENZ
MAX. ADMISSIBLE FREQUENZE
MAX. AMMISSIBLE FREQUENZA: 50 Hz

MAX. PREMISSIBLE ACCELERATION
MAX. ZULAESSIGE BESCHLEUNIGUNG:
ACCELERATION MAX. ADMISSIBLE:
ACCELERAZIONE MAX. AMMESSA: ±10xg

TORQUE FOR CONNECTIONS:
ANZUGSMOMENT FUER EINSCHRAUBSTUTZEN: M12x1.5: Mmax=21 Nm
COUPLE DE SERRAGE DES RACCORDS: M22x1.5: Mmax=53 Nm
COPPIA DI SERRAGGIO DEI RACCORDI: M16x1.5: Mmax=34 Nm

INSTALLATION POSITION AS DRAWN
EINBAULAGE WIE GEZEICHNET
POSITION D' INSTALLATION SUIVANT DESSIN
POSIZIONE DI MONTAGGIO COME DISEGNATO

SAFETY VALVE - SICHERHEITSVENTILE - SOLPAPE DE SECURITE - VALVOLA DI SICUREZZA

DYNAMIC PRESSURE OF THE SAFETY VALVE
STAUDRUCK DES SICHERHEITSVENTILES
PRESSION DYNAMIQUE DU SOUPAPE DE SECURITE
PRESSIONE DINAMICA DELLA VALVOLA DI SICUREZZA 12^{+4}_{0} (BY $\dot{V}_n$=100dm^3 / min.) bar

COMBINED UNLOADER - DRUCKREGLER - REGULATEUR DE PRESS - GRUPPO DI REGULAZIONE

CUT-OUT PRESSURE ABSCHALTDRUCK PRESSION D'OUVERTURE PRESSIONE D'APERTURA	10.0 ±0.2 bar	OPERATING RANGE SCHALTSPANNE PLAGE DE REGULATION GAMME DE REGUL.	0.7 +0.6bar

QR CODE LABEL DETAILS

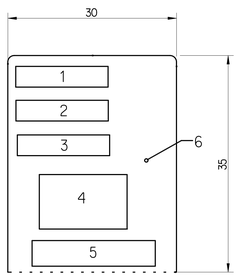

NR.	FIELD	SAMPLE DATA
1	PART IDENTIFICATION CODE	XXX
2	CUSTOMER PART No.	XXXXXXXXXXXXX
3	VENDOR CODE	XXXXXX
4	QR CODE	REFER TABLE 1
5	CONTENTS OF QR CODE	REFER TABLE 1
6	REMAINING AREA	-

TABLE 1: CONTENTS OF QR CODE

SL.No.	FIELD	SAMPLE DATA
1	PART IDENTIFICATION CODE	XXX
2	CUSTOMER PART No.	XXXXXXXXXXXXX
3	VENDOR CODE	XXXXXXXXXXXXXXXX
4	MANUFACTURING DATE	XXXXXX
5	MANUFACTURING SHIFT	XX
6	SERIAL No.	XX

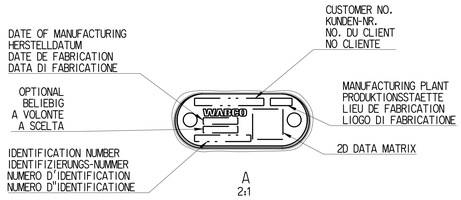

A
2:1

FITTINGS AT THE PORTS 21 AND 22

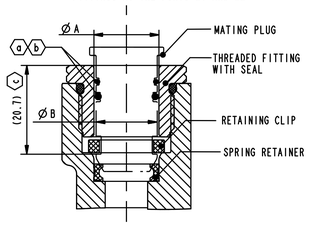

PORT	Ø A	Ø B
JED-388-0-M22x1.5	Ø 15 $^{+0.043}$	(Max. Ø 14.95)
JED-388-0-M16x1.5	Ø 9.5 $^{+0.036}$	(Max. Ø 9.45)

(a) ASSEMBLY LOAD NOT TO EXCEED 80 N WITH PREGREASE ON SEALS.

(b) SEALS ON THE PLUG ARE THE RESPONSIBILITY OF PLUG MANUFACTURER WITH REFERENCE TO DIMENSION "ØA" & "ØB".

(c) MAXIMUM INSERTION DEPTH OF PLUG TILL LOCKING.

PORT ANSCHLUSS ORIFICE ORIFIZIO	FUNCTION FUNCTION FONCTION FUNZIONE		THREAD GEWINDE FILETAGE FILETTAURA
1	FROM THE COMPRESSOR VOM LUFTPRESSER PROVENANT DU COMPRESSEUR PROVENIENTE DEL COMPRESSORE		OUTER THREAD M26x1.5
21	TO THE RESERVOIRS ZU DEN LUFTBEHAELTERN AUX RESERVOIR AL SERBATOII PER		M22x1.5, HEX 24 FITTINGS TO SUIT MATING SYSTEM EQUIVALENT TO VOSS 230
22	TO THE RESERVOIRS FOR REGENERATED AIR ZUM REGENERATIONS-LUFTBEHAELTER AUX RESERVOIRS D'AIR REGENERE AL SERBATOII PER L'ARIA RIGENERATA		M16x1.5, HEX 19 FITTINGS TO SUIT MATING SYSTEM EQUIVALENT TO VOSS 230
3	EXHAUST FOR COMPRESSED AIR ENTLUEFTUNG FUER DRUCKLUFT ECHAPPEMENT POUR AIR COMPRIME SCARIO PER ARIA COMPRESSA		SILENCER 4324070150
4/23	CONTROL PORT / TO COMPRESSOR STEUERANSCHLUSS / ZUM KOMPRESSOR ORIFICE DE COMMANDE / AU COMPRESSEUR ORIFIZIO DI COMANDO / A COMPRESSORE	CLOSED	M12x1.5 d=12

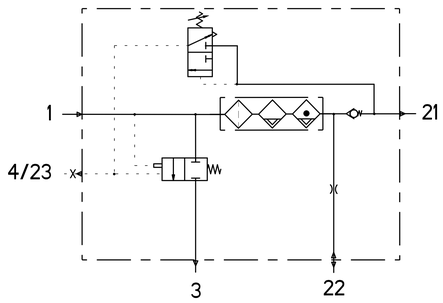

AIR DRYER WITH ASP

SLNO.	NOTES
1	SERVICE LIFE TO FIRST OVERHAUL 2 YEARS/200000 KM WHICHEVER IS EARLIER IF FITTED AS PER RECOMMENDED LAYOUT
2	OPEN PORTS ARE FITTED WITH CLOSURE PLUGS FOR STORAGE AND TRANSIT PURPOSE
3	REPAIR KIT PART NUMBER 432 410 005 2
4	MINIMUM CUT IN PRESSURE 8.5 bar

General Specifications ISO 8015, JED-334-1, Size ISO 14405 LP					
Further Technical Data: Product Specification					
Doc. Code-035		Sheet: 1	To: 4		
General Tolerances JED-261					
		Range of nominal dimensions in mm			
Class	11	> 0 ≤ 50	> 50 ≤ 180	> 180 ≤ 400	> 400
Fine		±0.5	±1	±1.5	±2
Medium	X	±1	±2	±3	±4
Coarse		±2	±3.5	±5	±6.5
Tapped Holes acc. JED-152					
11 Tolerance Class Applied Crossmarked					

Copyright ⓒ*			
Date	Signature		
Drawn 2025-12-11	Rajalingam		
Checked 2025-12-11	Rabak		
172 X 190 X 302			
Dimensions in mm			
Mass 4.23 kg	Scale 1:1	Material No. 432 420 025 0	Date of first issue: Doc.Code 005 / Language ML / Sheet 1/1
Size A 0	CAD System CREO	ECN-No. 520530 / Revision 1x C / Techn. Regs. 5050	Replaced by -

AIR DRYER

100mm

Tale Comunicato o riproduzione di questo, uso esteriore o comunicazione di suo contenuto non ammessa, salvo autorizzazione espressa. Le trasgressioni sono tenute al risarcimento dei danni. Tutti i diritti sono riservati, nel caso di rilascio brevetto, marchio o modello.
Weitergabe sowie Vervielfältigung dieser Unterlage, Verwertung und Mitteilung ihres Inhalts nicht gestattet, soweit nicht ausdrücklich zugestanden. Zuwiderhandlungen verpflichten zu Schadenersatz. Alle Rechte vorbehalten für den Fall der Patent-, Gebrauchsmuster- oder Geschmacksmustereintragung.
Ce document ne peut être communiqué à des tiers ni utilisé à des fins autres que celle pour lesquelles il a été fourni. Tous droits réservés en cas de délivrance d'un brevet, d'un modèle d'utilité ou d'un dessin ou modèle.
Questo documento non può essere ceduto a terzi e nessuno può servirsene per se stesso o per comunicare ad altri il contenuto, salvo autorizzazione scritta. Tutti i diritti sono riservati in caso di rilascio di brevetto, di modello di utilità o di disegno o modello.
Este documento no puede ser puesto a la vista de otras personas ni ser utilizado para otros fines que los fijados en el contrato. Todos los derechos están reservados en caso de concesión de patente, de modelo de utilidad o de diseño o modelo.
Este documento não pode ser divulgado a terceiros nem ser utilizado para outros propósitos que os estipulados no contrato. Todos os direitos são reservados em caso de concessão de patente, de modelo de utilidade ou de desenho ou modelo.