	EXTERNAL SURFACE AEUSSERE OBERFLAECHE SURFACE EXTERIEURE SUPERFICIE ESTERNA	
I	JED-259	
II	JED-256	
III	JED-471	
IV	PLASTIC / KUNSTSOFF	

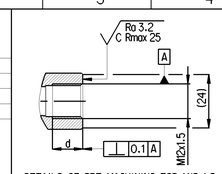

DETAILS OF PRT MACHINING FOR M12x1.5

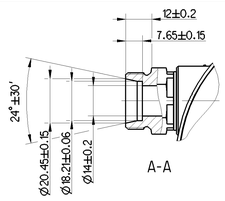

INLET ADAPTOR DETAILS

SAFETY CHARACTERISTICS	0
SIGNIFICANT CHARACTERISTICS	0

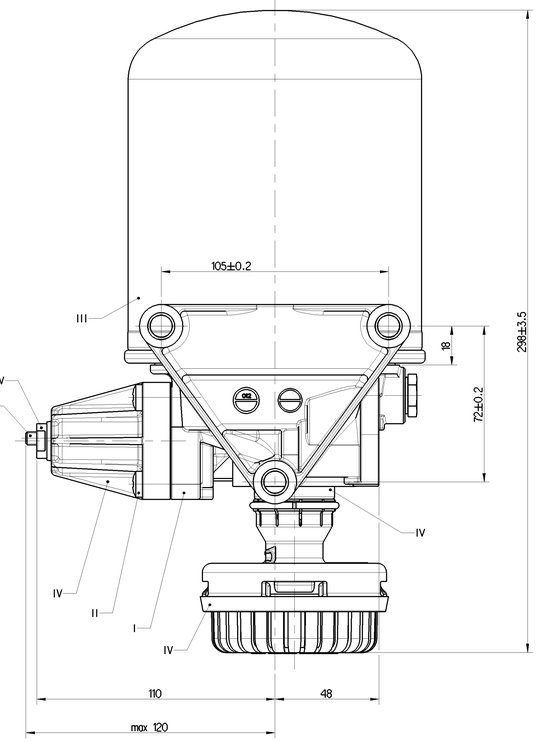

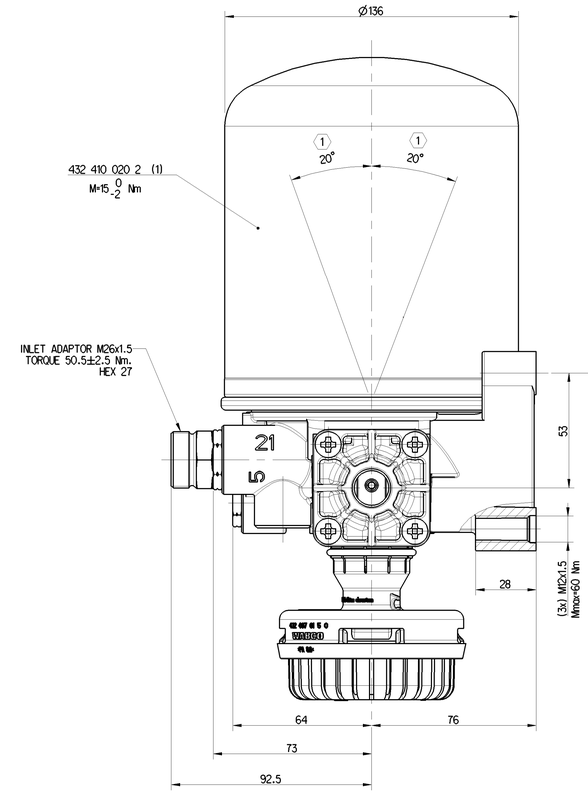

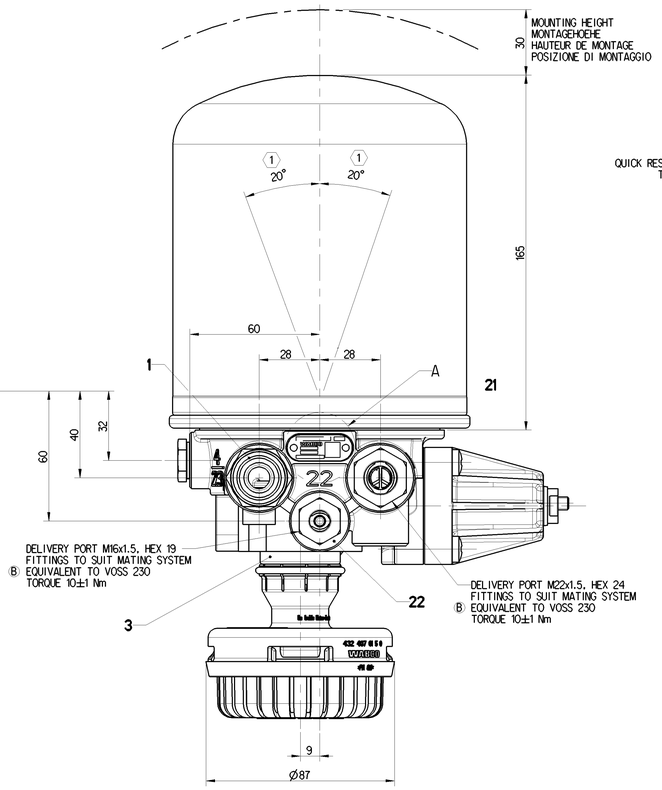

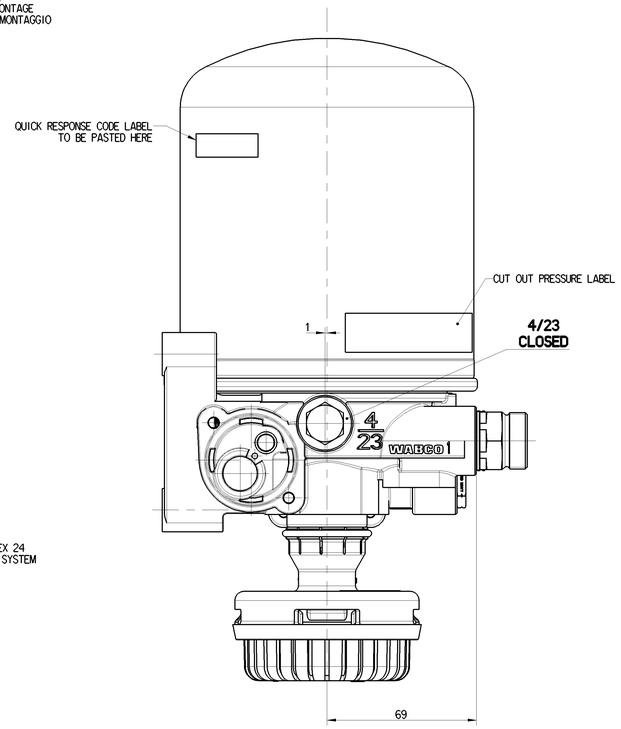

TECHNICAL DATA: / TECHNISCHE DATEN: / CARACTERISTIQUES TECHNIQUES: / CARATTERISTICHE TECNICHE:

THERMAL RANGE OF CONTINUOUS APPLICATION:
THERMISCHER DAUERANWENDUNGSBEREICH:
PLAGE DE TEMPERATURE EN UTILISATION CONTINUE:
COMPO DI APPLICAZIONE CONTINUA: -40°C....+65 °C

RESISTANCE TO HEAT:
WAERMEBESTAENDIGKEIT:
RESISTANCE A LA CHALEUR:
RESISTANZA AL CALORE: max +80 °C

MEDIUM: COMPRESSED AIR
MEDIUM: DRUCKLUFT
FLUIDE: AIR COMPRIME
FLUIDO: ARIA COMPRESSA

WORKING PRESSURE:
BETRIEBSDRUCK:
PRESSION DE SERVICE:
PRESSIONE D' ESERCIZIO: P_e max=13 bar

MAX. PERMISSIBLE FREQUENCY
MAX. ZULAESSIGE FREQUENZ
MAX. ADMISSIBLE FREQUENZE
MAX. AMMISSIBLE FREQUENZA 50 Hz

MAX. PREMISSIBLE ACCELERATION
MAX. ZULAESSIGE BESCHLEUNIGUNG:
ACCELERATION MAX. ADMISSIBLE:
ACCELERAZIONE MAX. AMMESSA: ±10xg

TORQUE FOR CONNECTIONS:
ANZUGSMOMENT FUER EINSCHRAUBSTUTZEN: M12x1.5: Mmax=21 Nm
COUPLE DE SERRAGE DES RACCORDS: M22x1.5: Mmax=53 Nm
COPPIA DI SERRAGGIO DEI RACCORDI: M16x1.5: Mmax=34 Nm

SAFETY VALVE - SICHERHEITSVENTILE - SOLPAPE DE SECURITE - VALVOLA DI SICUREZZA

DYNAMIC PRESSURE OF THE SAFETY VALVE
STAUDRUCK DES SICHERHEITSVENTILES
PRESSION DYNAMIQUE DU SOLPAPE DE SECURITE
PRESSIONE DINAMICA DELLA VALVOLA DI SICUREZZA 12^{+4}_{0} (BY $\dot{V}_n$=100dm^3 / min.) bar

COMBINED UNLOADER - DRUCKREGLER - REGULATEUR DE PRESS - GRUPPO DI REGULAZIONE

CUT-OUT PRESSURE ABSCHALTDRUCK PRESSION D'OUVERTURE PRESSIONE D'APERTURA	10.0 ±0.2 bar	OPERATING RANGE SCHALTSPANNE PLAGE DE REGULATION GAMME DE REGUL.	0.9 +0.4 bar

Ⓑ QR CODE LABEL DETAILS

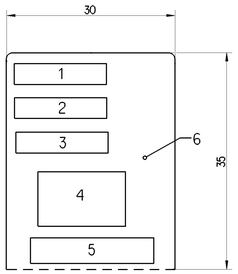

NR.	FIELD	SAMPLE DATA
1	PART IDENTIFICATION CODE	XXX
2	CUSTOMER PART No.	XXXXXXXXXXXXX
3	VENDOR CODE	XXXXXX
4	QR CODE	REFER TABLE 1
5	CONTENTS OF QR CODE	REFER TABLE 1
6	REMAINING AREA	-

TABLE 1: CONTENTS OF QR CODE

SL.No.	FIELD	SAMPLE DATA
1	PART IDENTIFICATION CODE	XXX
2	CUSTOMER PART No.	XXXXXXXXXXXXX
3	VENDOR CODE	XXXXXXXXXXXXXXXX
4	MANUFACTURING DATE	XXXXXX
5	MANUFACTURING SHIFT	XX
6	SERIAL No.	XX

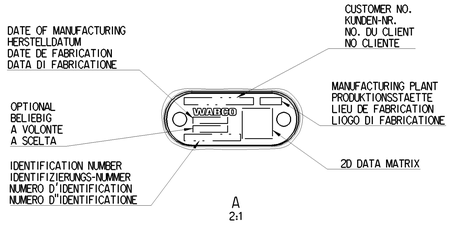

Ⓑ FITTINGS AT THE PORTS 21 AND 22

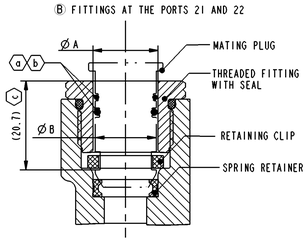

PORT	Ø A	Ø B
JED-388-0-M22x1.5	$Ø\,15^{+0.043}$	(Max. Ø14.95)
JED-388-0-M16x1.5	$Ø\,9.5^{+0.036}$	(Max. Ø9.45)

(a) ASSEMBLY LOAD NOT TO EXCEED 80 N WITH PREGREASE ON SEALS.

(b) SEALS ON THE PLUG ARE THE RESPONSIBILITY OF PLUG MANUFACTURER WITH REFERENCE TO DIMENSION "ØA" & "ØB".

(c) MAXIMUM INSERTION DEPTH OF PLUG TILL LOCKING.

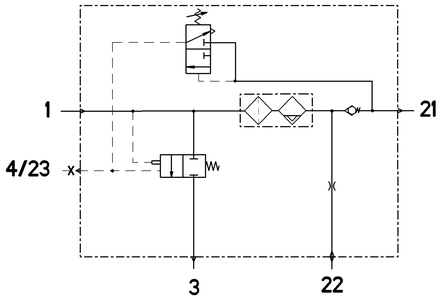

PORT ANSCHLUSS ORIFICE ORIFIZIO	FUNCTION FUNCTION FONCTION FUNZIONE		THREAD GEWINDE FILETAGE FILETTAURA	
1	FROM THE COMPRESSOR VOM LUFTPRESSER PROVENANT DU COMPRESSEUR PROVENIENTE DEL COMPRESSORE		OUTER THREAD M26x1.5	
21	TO THE RESERVOIRS ZU DEN LUFTBEHAELTERN AUX RESERVOIR AL SERBATOII PER		M22x1.5, HEX 24 FITTINGS TO SUIT MATING SYSTEM EQUIVALENT TO VOSS 230	Ⓑ
22	TO THE RESERVOIRS FOR REGENERATED AIR ZUM REGENERATIONS-LUFTBEHAELTER AUX RESERVOIRS D'AIR REGENERE AL SERBATOII PER L'ARIA RIGENERATA		M16x1.5, HEX 19 FITTINGS TO SUIT MATING SYSTEM EQUIVALENT TO VOSS 230	Ⓑ
3	EXHAUST FOR COMPRESSED AIR ENTLUEFTUNG FUER DRUCKLUFT ECHAPPEMENT POUR AIR COMPRIME SCARIO PER ARIA COMPRESSA		SILENCER 4324070150	
4/23	CONTROL PORT / TO COMPRESSOR STEUERANSCHLUSS / ZUM KOMPRESSOR ORIFICE DE COMMANDE / AU COMPRESSEUR ORIFIZIO DI COMANDO / A COMPRESSORE	CLOSED	M12x1.5 d=12	

(1) INSTALLATION POSITION AS DRAWN
EINBAULAGE WIE GEZEICHNET
POSITION D' INSTALLATION SUIVANT DESSIN
POSIZIONE DI MONTAGGIO COME DISEGNATO

SL.NO.	NOTES	
1	SERVICE LIFE TO FIRST OVERHAUL 2 YEARS/200000 KM WHICHEVER IS EARLIER IF FITTED AS PER RECOMMENDED LAYOUT	
2	OPEN PORTS ARE FITTED WITH CLOSURE PLUGS FOR STORAGE AND TRANSIT PURPOSE	
3	REPAIR KIT PART NUMBER	432 410 005 2
4	MINIMUM CUT IN PRESSURE	8.5 bar

General Specification: JED-334-1 , Size ISO 14405 LP
Further Technical Data: Product Specification
Doc. Code: 035 Sheet: 1 To 4

General Tolerances JED-261

		Range of Nominal Dimensions (in mm)				
		≥ 0.5	> 50 ≤ 180	> 180 ≤ 400	> 400 ≤ 1000	
Class (1)						
Fine		0.5	1.0	1.5	2.0	
Medium	X	1.0	2.0	3.0	4.0	±3°
Coarse		2.0	3.5	5.0	6.5	

Tapped Holes acc. JED-152
(1) Tolerance Class Applied Crossmarked

Copyright WABCO®

Date	Signature	
Drawn 2021-10-06	Chris/solomon D	
Checked 2021-10-07	Kastrzewo	
Expert Puto		

WABCO

AIR DRYER
LUFTTROCKNER
DESSICATEUR D'AIR
ESSICATORE D'ARIA

Mass	Scale	Material No.	Date of first issue 2015-09-28
4.23 KG	1:1 (2:1)	432 420 351 0	

Size	Ab. System	EDB-No.	Revision	Techn. Reg.	Doc.Code	Language	Sheet	Replacement for
A 0	CREO	507070	6x B	5050	005	ML	1/1	-

100mm

Diese Dokumentation ist vertraulich zu behandeln. Nicht ausgehändigte oder vervielfältigte Unterlagen oder Informationen dürfen ohne vorherige schriftliche Zustimmung weder an Dritte weitergegeben noch anderweitig verwendet werden. Zuwiderhandlungen verpflichten zum Schadensersatz. Alle Rechte vorbehalten.

This document is confidential. Without our prior written consent, no information or documents may be disclosed to third parties or be used for any purpose. Violators are liable for damages. All rights reserved.

Ce document est confidentiel. Sans notre accord écrit, aucune information ni aucun document ne peut être divulgué à des tiers ni être utilisé à quelque fin que ce soit. Les contrevenants sont tenus à des dommages-intérêts. Tous droits réservés.

Questo documento è riservato. Senza il nostro consenso scritto, non divulgare a terzi né utilizzare per qualsiasi scopo documenti o informazioni. Gli inadempienti sono tenuti al risarcimento dei danni. Tutti i diritti sono riservati.