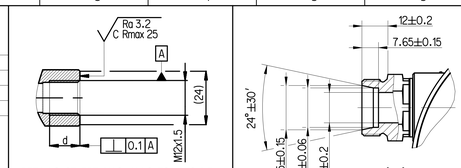
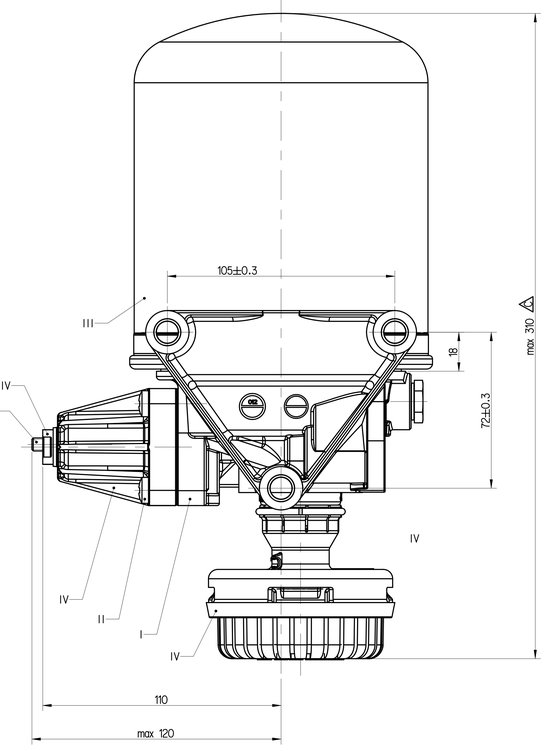
EXTERNAL SURFACE AEUSSERE OBERFLAECHE SURFACE EXTERIEURE SUPERFICIE ESTERNA	
I	JED-259
II	JED-256
III	JED-471
IV	PLASTIC / KUNSTSOFF

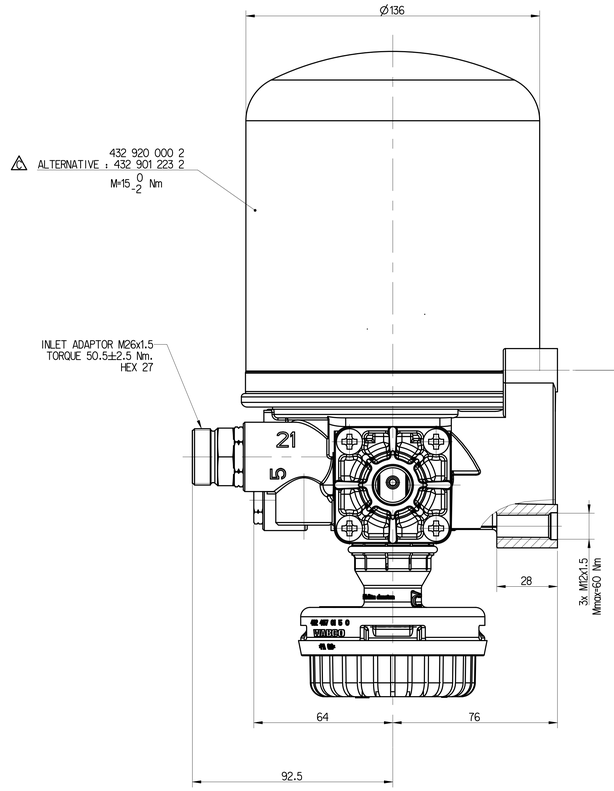


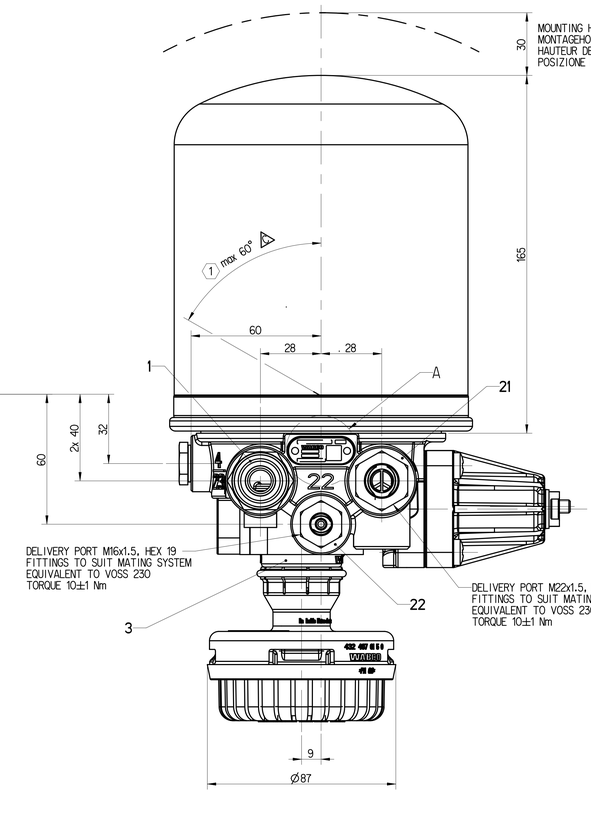
DETAILS OF PRT MACHINING FOR M12x1.5

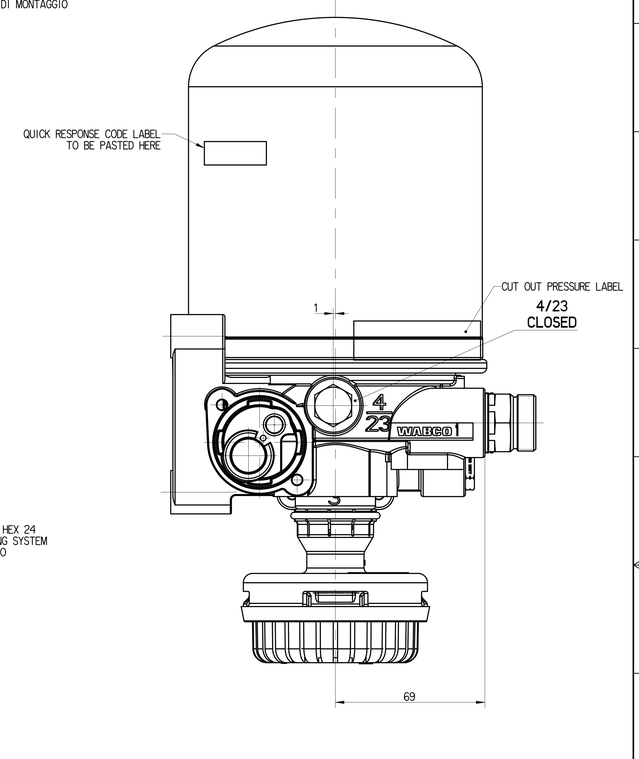
INLET ADAPTOR DETAILS

SAFETY CHARACTERISTICS	0
SIGNIFICANT CHARACTERISTICS	0
CUSTOMER INTERFACE	0









TECHNICAL DATA: / TECHNISCHE DATEN: / CARACTERISTIQUES TECHNIQUES: / CARATTERISTICHE TECNICHE:

THERMAL RANGE OF CONTINUOUS APPLICATION: THERMISCHER DAUERANWENDUNGSBEREICH: PLAGE DE TEMPERATURE EN UTILISATION CONTINUE: CAMPO DI APPLICAZIONE CONTINUA:	-40°C....+65 °C
RESISTANCE TO HEAT: WAERMEBESTAENDIGKEIT: RESISTANCE A LA CHALEUR: RESISTANZA AL CALORE:	max +80 °C
MEDIUM: COMPRESSED AIR MEDIUM: DRUCKLUFT FLUIDE: AIR COMPRIME FLUIDO: ARIA COMPRESSA	
WORKING PRESSURE: BETRIEBSDRUCK: PRESSION DE SERVICE: PRESSIONE D' ESERCIZIO:	P_e max=13 bar
MAX. PERMISSIBLE FREQUENCY MAX. ZULAESSIGE FREQUENZ MAX. ADMISSIBLE FREQUENZE MAX. AMMISSIBLE FREQUENZA	50 Hz
MAX. PREMISSIBLE ACCELERATION MAX. ZULAESSIGE BESCHLEUNIGUNG: ACCELERATION MAX. ADMISSIBLE: ACCELERAZIONE MAX. AMMESSA:	±10xg
TORQUE FOR CONNECTIONS: ANZUGSMOMENT FUER EINSCHRAUBSTUTZEN: COUPLE DE SERRAGE DES RACCORDS: COPPIA DI SERRAGGIO DEI RACCORDI:	M12x1.5: Mmax=21 Nm M22x1.5: Mmax=53 Nm M16x1.5: Mmax=34 Nm

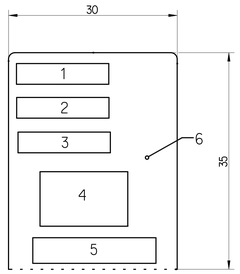
SAFETY VALVE - SICHERHEITSVENTILE - SOLPAPE DE SECURITE - VALVOLA DI SICUREZZA

DYNAMIC PRESSURE OF THE SAFETY VALVE STAUDRUCK DES SICHERHEITSVENTILES PRESSION DYNAMIQUE DU SOUPAPE DE SECURITE PRESSIONE DINAMICA DELLA VALVOLA DI SICUREZZA	12^{+4}_{0} (BY $\dot{V}_n$=100dm^3 / min.) bar

COMBINED UNLOADER - DRUCKREGLER - REGULATEUR DE PRESS - GRUPPO DI REGOLAZIONE

CUT-OUT PRESSURE ABSCHALTDRUCK PRESSION D'OUVERTURE PRESSIONE D'APERTURA	10.0 ±0.2 bar	OPERATING RANGE SCHALTSPANNE PLAGE DE REGULATION GAMME DE REGUL.	0.9 +0.4 bar

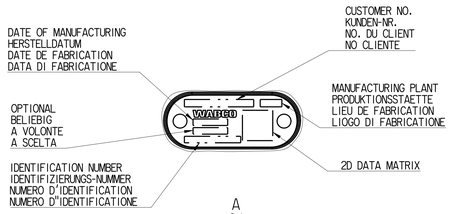
QR CODE LABEL DETAILS



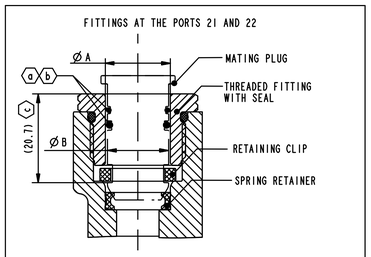
NR.	FIELD	SAMPLE DATA
1	PART IDENTIFICATION CODE	XXX
2	CUSTOMER PART No.	XXXXXXXXXXXX
3	VENDOR CODE	XXXXXX
4	QR CODE	REFER TABLE 1
5	CONTENTS OF QR CODE	REFER TABLE 1
6	REMAINING AREA	-

TABLE 1: CONTENTS OF QR CODE

SL.No.	FIELD	SAMPLE DATA
1	PART IDENTIFICATION CODE	XXX
2	CUSTOMER PART No.	XXXXXXXXXXXX
3	VENDOR CODE	XXXXXXXXXXXXXXX
4	MANUFACTURING DATE	XXXXXX
5	MANUFACTURING SHIFT	XX
6	SERIAL No.	XX



A
2:1

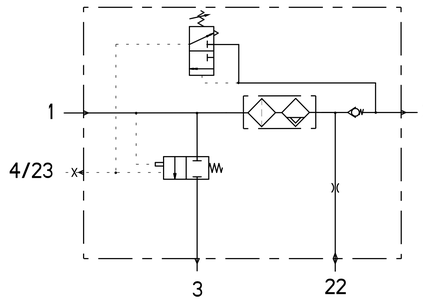


PORT	Ø A	Ø B
JED-388-0-M22x1.5	Ø 15 $^{+0.043}$	(Max. Ø14.95)
JED-388-0-M16x1.5	Ø 9.5 $^{+0.036}$	(Max. Ø9.45)

ⓐ ASSEMBLY LOAD NOT TO EXCEED 80 N WITH PREGREASE ON SEALS.

ⓑ SEALS ON THE PLUG ARE THE RESPONSIBILITY OF PLUG MANUFACTURER WITH REFERENCE TO DIMENSION "ØA" & "ØB".

ⓒ MAXIMUM INSERTION DEPTH OF PLUG TILL LOCKING.



PORT ANSCHLUSS ORIFICE ORIFIZIO	FUNCTION FUNCTION FONCTION FUNZIONE		THREAD GEWINDE FILETAGE FILETTAURA
1	FROM THE COMPRESSOR VOM LUFTPRESSER PROVENANT DU COMPRESSEUR PROVENIENTE DEL COMPRESSORE		OUTER THREAD M26x1.5
21	TO THE RESERVOIRS ZU DEN LUFTBEHAELTERN AUX RESERVOIR AL SERBATOII PER		M22x1.5, HEX 24 FITTINGS TO SUIT MATING SYSTEM EQUIVALENT TO VOSS 230
22	TO THE RESERVOIRS FOR REGENERATED AIR ZUM REGENERATIONS-LUFTBEHAELTER AUX RESERVOIRS D'AIR REGENERE AL SERBATOII PER L'ARIA RIGENERATA		M16x1.5, HEX 19 FITTINGS TO SUIT MATING SYSTEM EQUIVALENT TO VOSS 230
3	EXHAUST FOR COMPRESSED AIR ENTLUEFTUNG FUER DRUCKLUFT ECHAPPEMENT POUR AIR COMPRIME SCARIO PER ARIA COMPRESSA		SILENCER 4324070150
4/23	CONTROL PORT / TO COMPRESSOR STEUERANSCHLUSS / ZUM KOMPRESSOR ORIFICE DE COMMANDE / AU COMPRESSEUR ORIFIZIO DI COMANDO / A COMPRESSORE	CLOSED	M12x1.5 d=12

ⓘ INSTALLATION POSITION AS DRAWN
EINBAULAGE WIE GEZEICHNET
POSITION D' INSTALLATION SUIVANT DESSIN
POSIZIONE DI MONTAGGIO COME DISEGNATO

SL.NO.	NOTES	
1	SERVICE LIFE TO FIRST OVERHAUL 2 YEARS/200000 KM WHICHEVER IS EARLIER IF FITTED AS PER RECOMMENDED LAYOUT	
2	OPEN PORTS ARE FITTED WITH CLOSURE PLUGS FOR STORAGE AND TRANSIT PURPOSE	
3	REPAIR KIT PART NUMBER	432 410 005 2
4	MINIMUM CUT IN PRESSURE	8.5 bar

General Specification: ISO 8015, JED-334-1, Size ISO 14405 LP
Further Technical Data/ Product Specification
Doc.- Code=035 — Sheet\ 1 — To 4
General Tolerances JED-261
Range of nomenal dimensions in mm
Class: fine ±0.5 / ±1 / ±1.5 / ±2 / ±3°; medium X / ±1 / ±2 / ±3 / ±4 / ±3°; coarse ±2 / ±3.5 / ±5 / ±6.5
Tapped Holes acc.: JED-152; JED-388
Tolerance Class Applied Crossmarked

Copyright ZF ®
Date 2025-07-07 Signature Rajalingam
Drawn
Checked 2025-07-18 Rabak
Dimensions in mm
Mass 4.23 kg
Scale 1:1 (2:1)
Size A0
CAD System CREO
Material No. 432 420 351 0
Date of first issue 2015-09-28
Doc.Code 005 | Language ML | Sheet 1/1
ECN-No. 520012 | Revision 3x C | Techn. Reg. 5050 | Replacement for -

AIR DRYER

Diese Zeichnung ist urheberrechtlich geschützt. Jede Weitergabe sowie Vervielfältigung dieser Zeichnung, Verwertung und Mitteilung ihres Inhalts ist nicht gestattet, soweit nicht ausdrücklich zugestanden. Zuwiderhandlungen verpflichten zu Schadenersatz. Alle Rechte vorbehalten. Insbesondere für den Fall der Patenterteilung oder GM-Eintragung behalten wir uns das Recht auf jede Verfügung vor.
Questo documento è di proprietà. Non è permesso passarlo a terzi o riprodurlo senza nostro esplicito consenso scritto. Gli obblighi derivanti dalla legge sono a carico del trasgressore. Tutti i diritti sono riservati. Ci riserviamo espressamente tutti i diritti in caso di concessione di brevetto o di registrazione di modello di utilità.
Ce document est la propriété de ZF. Il ne peut être ni communiqué à des tiers ni reproduit sans notre autorisation écrite. Les contrevenants sont tenus à réparation. Tous droits réservés. Nous nous réservons expressément tous les droits en cas de délivrance d'un brevet ou d'enregistrement d'un modèle d'utilité.
Este documento es propiedad de ZF. Prohibida su reproducción o entrega a terceros sin nuestro consentimiento por escrito. Los infractores quedan obligados a indemnizar daños y perjuicios. Todos los derechos reservados. Nos reservamos expresamente todos los derechos en caso de concesión de patente o modelo de utilidad.
Este documento é propriedade da ZF. Proibida a sua reprodução ou entrega a terceiros sem o nosso consentimento por escrito. Os infractores ficam obrigados a indemnizar danos e prejuízos. Todos os direitos reservados. Reservamo-nos expressamente todos os direitos em caso de concessão de patente ou modelo de utilidade.
Deze tekening is het eigendom van ZF. Het is verboden deze tekening aan derden te overhandigen of te kopiëren zonder onze uitdrukkelijke schriftelijke toestemming. Overtreders zijn verplicht tot schadevergoeding. Alle rechten voorbehouden. Wij behouden ons uitdrukkelijk alle rechten voor in geval van octrooiverlening of inschrijving van een gebruiksmodel.
Denna ritning är upphovsrättsligt skyddad. Vidarebefordran och kopiering av denna ritning, användning och förmedling av dess innehåll är inte tillåtet om det inte uttryckligen har medgivits. Överträdelser förpliktar till skadestånd. Alla rättigheter förbehålls. Särskilt förbehåller vi oss rätten till varje förfogande vid patentbeviljande eller GM-registrering.