‹1› SAFETY CHARACTERISTICS	0
‹2› SIGNIFICANT CHARACTERISTICS	0

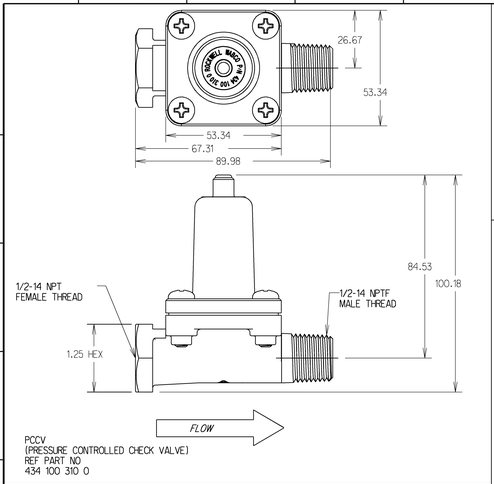

PCCV
(PRESSURE CONTROLLED CHECK VALVE)
REF PART NO
434 100 310 0

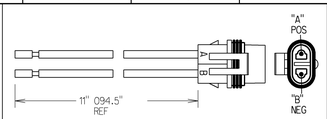

METRI-PACK CABLE ASSY
REF PART NO
RWABC-002

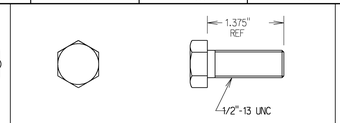

CAP SCREW
REF PART NO
RWABC-006

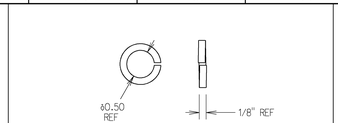

LOCK WASHER
REF PART NO
RWABC-005

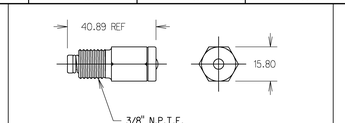

RELIEF VALVE
PART #2206-D-1226
(INSTALLED ON DRYER)
•IF REMOVED RETORQUE TO 20 3 Nm

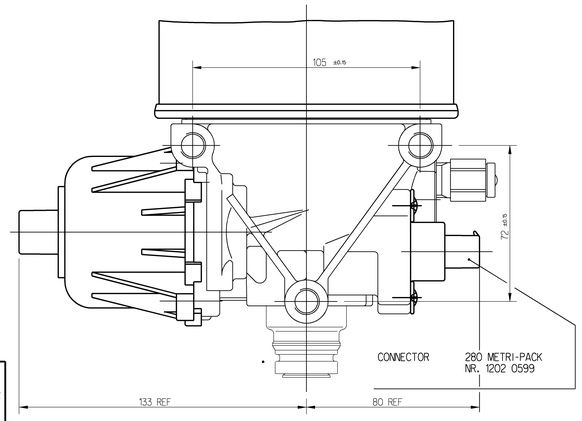

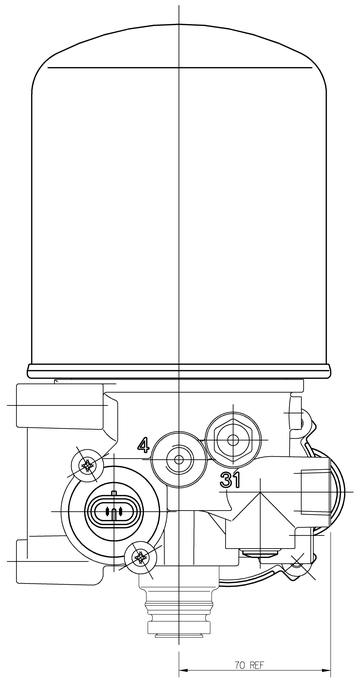

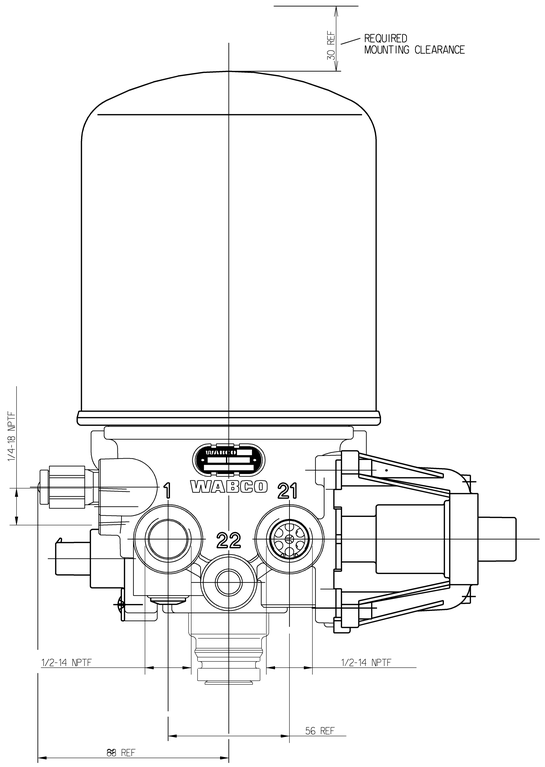

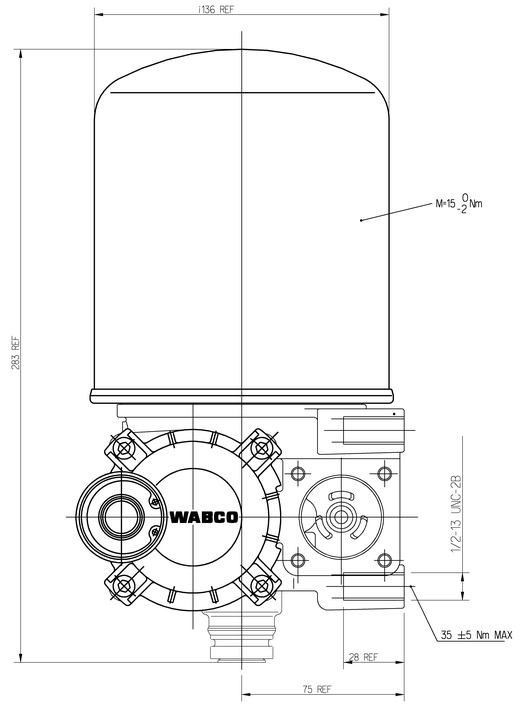

NOTES:

THERMAL RANGE OF CONTINUOUS APPLICATION: -40°C....+80°C (-40°F...+176°F)

RESISTANCE TO HEAT: MAX.+80°C (+176°F)

MEDIUM: COMPRESSED AIR

WORKING PRESSURE: $p_e$max.= 10.3bar 150psi ≙

INSTALLATION POSITION AS DRAWN

TORQUE FOR CONNECTIONS:
IN CASE OF GREASED THREAD
- 1/4-18 NPTF M _30Nm <
- 3/8-18 NPTF M _30Nm <
- 1/2-14 NPTF M _50Nm <

1 FROM THE COMPRESSOR
21 TO THE RESERVOIRS
31 **RELIEF VALVE PORT**
4 CONTROL PORT

HEATING:

CUT-IN TEMPERATURE 7 ±6°C (45 ±11°F)

CUT-OFF TEMPERATURE 29.5 ±3°C (85 ±5°F)

BATTERY VOLTAGE: 12 $^{+4}_{-2}$V DC

POWER: 100 W WITHOUT CURRENT | 95 $^{0}_{-5}$W WITH 12 V DC APPLIED ACROSS THE HEATER CONTACTS

2206-D-1226	-----	-----	-----	12V	432 421 035 0	432 421 040 0
RELIEF VALVE (1ea)	WIRING HARNESS (1ea)	WASHERS (3ea)	BOLTS (3ea)	VOLTAGE	BASE DRYER	KIT NUMBER

THIRD ANGLE PROJECTION

General Specification: JED-334-1 , Size ISO 14405 LP							
Further Technical Data:							
Doc. Code:			Sheet:	To			
General Tolerances JED-261							
	Range of Nominal Dimensions (± mm)						
Class 1)	≥ 50	> 50 ≥ 180	> 180 ≥ 400	> 400			
Fine	0.5	1.0	1.5	2.0			
Medium	1.0	2.0	3.0	4.0	±3°		
Coarse	2.0	3.5	5.0	6.5			
Tapped Holes acc.							
1) Tolerance Class Applied Crossmarked							

Copyright WABCO®

Date	Signature
Drawn 2019-05-02	Srinivasaperumal
Checked 2019-05-02	Marchetti
Expert -	

WABCO ©

SS1200 COALESCING INSTALLAION KIT

Mass	Scale	Material No.			Date of first assem. -	
- KG	1:1	432 421 040 0			Doc.Code 053	Language EN	Sheet 1/1
Size A 0	CAD System CREO	ECN-No. 500807	Revision 14	Techn. Resp. C 5050_MW	Replacement for - -	

100mm

Tous Droits réservés, la reproduction de ce document, toute exploitation ou communication de son contenu sont interdites, sauf autorisation expresse. Tout manquement à cette règle constitue un délit susceptible de poursuites judiciaires et expose son auteur à un versement de dommages et intérêts. Ce document peut être modifié à tout moment sans préavis et ne représente pas un engagement de WABCO.

Reproduction, use, transmitting other strategy, reserving and advising, less, rights not granted, owed. Violation of this rule is a crime and exposes the author to payment of damages and interest. This document may be modified at any time without notice and does not represent a commitment by WABCO.

Alle Rechte vor allem für Patenterteilung oder gebrauchsmusterliche Eintragung vorbehalten.

Questo documento è proprietà WABCO e contiene quanto descritto, se utilizzato e contenuto è vietato a terzi senza previo consenso scritto. Ogni violazione costituisce un reato ed obbliga il responsabile al risarcimento dei danni subiti. WABCO si riserva il diritto di modificare il presente documento senza preavviso.

Copia y Pie documento prohibida, sin previo permiso escrito, está bajo la ley de protección de la propiedad. Su violación es delito y obliga a quien la cometa a la indemnización de los daños causados. WABCO se reserva el derecho de modificar el presente documento sin previo aviso.

Este documento é propriedade WABCO e contém o descrito, se utilizado e conteúdo é proibido a terceiros sem prévio consentimento escrito. Qualquer violação constitui um crime e obriga o responsável a indemnizar os danos causados. WABCO reserva o direito de alterar este documento sem aviso prévio.