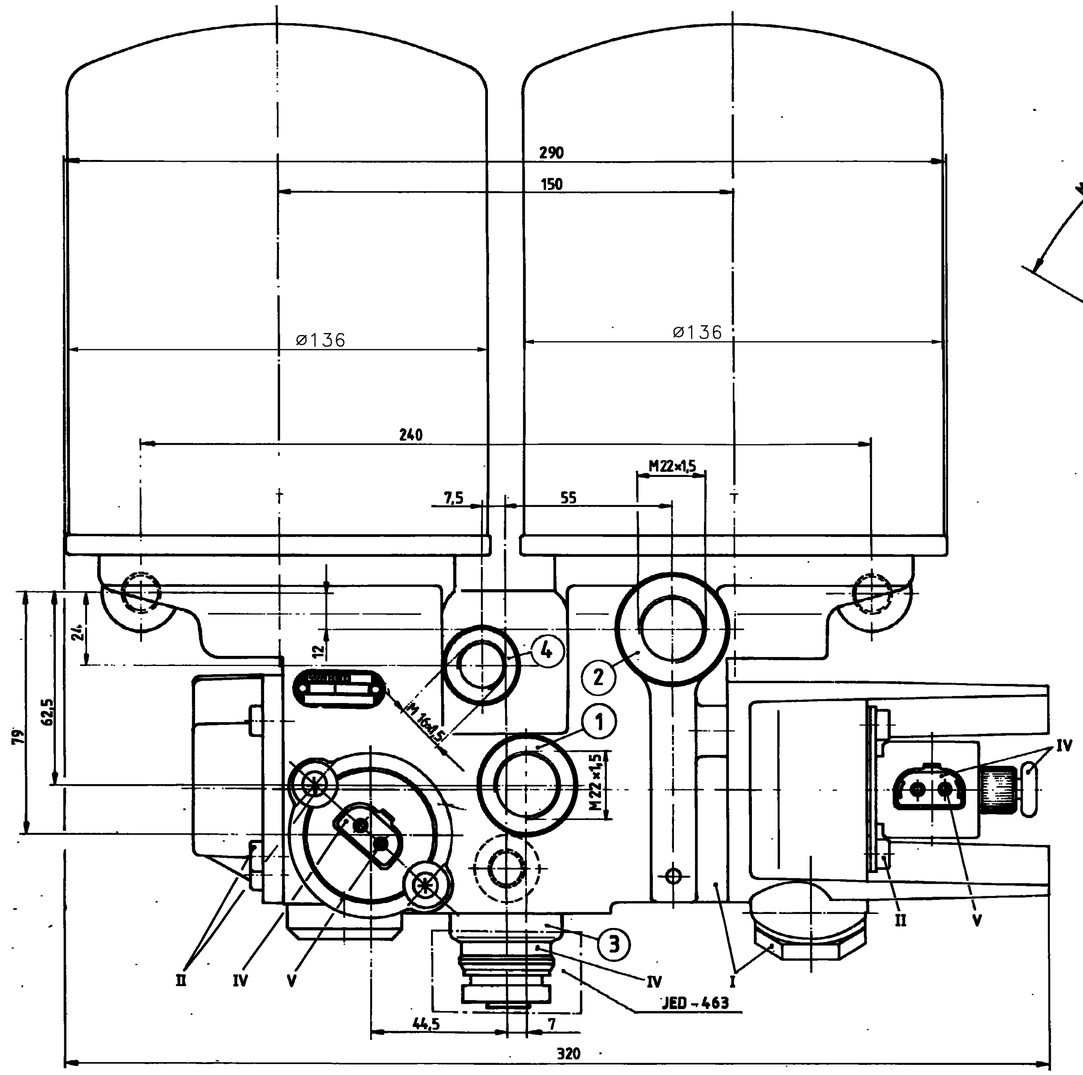

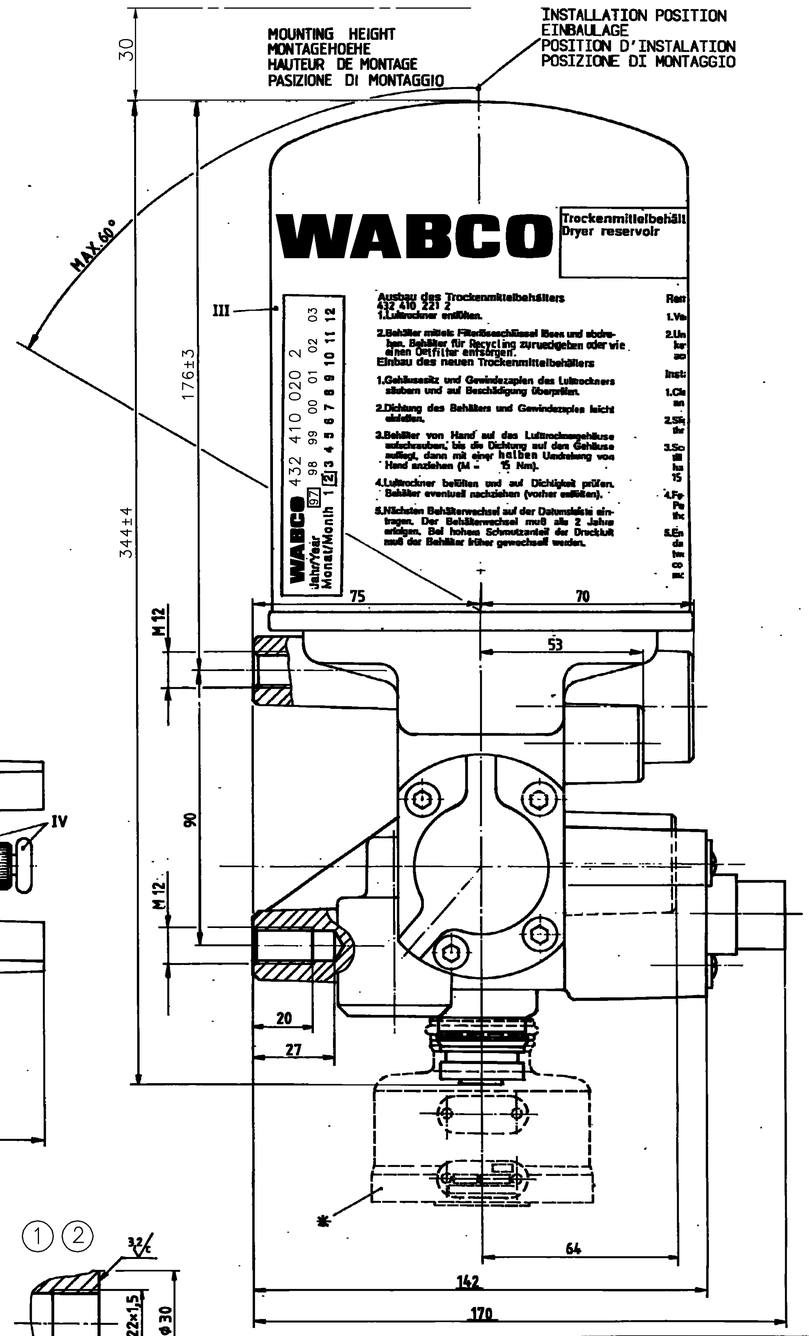

THE VALVE CORRESPONDS TO THE REGULATION FOR ELECTROMAGNETIC DEVICES ACCORDING TO VDE 0580
GERAET ENTSPRICHT DEN BESTIMMUNGEN FUER ELEKTROMAGNETISCHE GERAETE NACH VDE 0580
LA VALVE CORRESPOND AUX CONDITIONS POUR DES APPAREILS ELECTROMAGNETIQUES SUIVANT VDE 0580
LA VALVOLA CORRISPONDE ALLE CONDIZIONI PER APPARECCHI ELETTROMAGNETICHI SECONDO VDE 0580

VOLTAGE SPANNUNG VOLTAGE VOLTAGGIO	= $24^{+4,8}_{-2,4}$ V
TYP OF CURRENT STROMART NATURE DU COURANT NATURA DELLA CORRENTE	: DIREKT CURRENT : GLEICHSTROM : COURANT CONTINU : CORRENTE CONTINUO
SERVICE CONDITION BETRIEBSART CONDITION DU SERVICE CONDIZIONE DI SERVIZIO	: CONTINUOS SERVICE : DAUERBETRIEB : SERVICE CONTINU : SERVIZIO CONTINUO
NOMINAL CURRENT NENNSTROM COURANT NOMINAL CORRENTE NOMINALE	: I_N = 0,6 A
TYP OF PROTECTION TO IEC 529 SCHUTZART NACH IEC 529 MODE DE PROTECTION SUIVANT IEC 529 TIPO DI PROTEZIONE SECONDO IEC 529	IP 66
MEDIUM MEDIUM FLUIDE FLUIDO	: COMPRESSED AIR : DRUCKLUFT : AIR COMPRIME : ARIA COMPRESSA
WORKING PRESSURE BETRIEBSDRUCK PRESSION D'UTILISATION PRESSIONE DI ESERCIZIO	: pe ≤ 13 bair
CONTINOUS THERMAL RANGE OF APPLICATION THERMISCHER DAUERANWENDUNGSBEREICH PLAGE DE TEMPERATURE EN UTILISATION CONTINUE CAMPO TERMICO DI APPLICAZIONE COTINUA	: -40°C... +65°C
RESISTANCE TO HEAT WAERMEBESTAENDIGKEIT RESISTANCE A LA CHALEUR RESISTENZA AL CALORE	: ≤ + 80° C
INSTALLATION POSITION AS DRAWN EINBAULAGE WIE GEZEICHNET POSITION D INSTALLATION SUIVANT DESSIN POSIZIONE DI MONTAGGIO COME DESEGNATO	
MAX. PERMISSIBLE ACCELERATION MAX. ZULAESSIGE BESCHLEUNIGUNG ACCELERATION MAX. ADMISSIBLE ACCELERAZIONE MAX. PERMISSIBILE	: ± 10xg
MAX. PERMISSIBLE FREQUENCY MAX. ZULAESSIGE FREQUENZ FREQUENCE MAX ADMISSIBLE FREQUENZA MAX. PERMISSIBLE	: 50 Hz

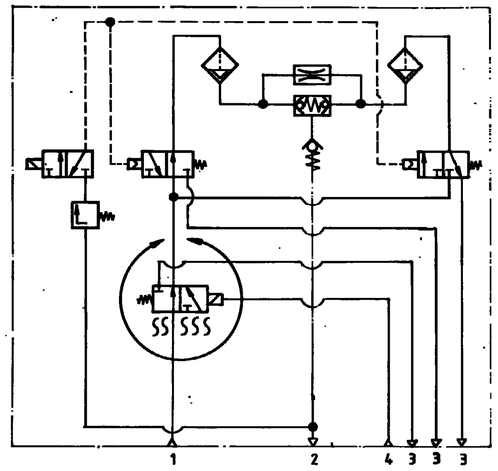

MAX. PERMISSIBLE DELIVERY
OF THE COMPRESSORE
ZULAESSIGE MAXIMALE FOERDERMENGE
DES KOMPRESSORS
DEBIT MAX. ADMIS DU
COMPRESSEUR
PORTATA MAX. AMMESSA
DEL COMPRESSORE

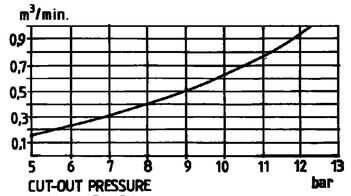

CUT-OUT PRESSURE
ABSCHALTDRUCK
PRESSION DE DECLENCHEMENT
PRESSIONE DI APERTURA

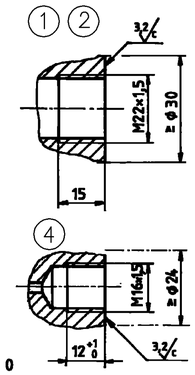

SURFACE PROTECTION OBERFLAECHENSCHUTZ PROTECTION DE SURFACE PROTEZIONE SUPERFICIALE	
I	JED-259
II	JED-256
III	JED-471 WEISS / WHITE
IV	KUSTSTOFF/GUMMI
V	JED-570.656

1. FROM AIR COMPRESSOR
VOM LUFTPRESSER.
DU COMPRESSEUR
DAL COMPRESSORE

2. TO THE AIR RESERVOIRS
ZU DEN LUFTBEHAELTERN
AUX RESERVOIRS D'AIR
AL SERBATOI D'ARIA

3. EXHAUST FOR COMPRESSED
ENTLUEFTUNG FUER DRUCKLUFT
ECHAPPEMENT POUR AIR COMPRIME
SCARIO PER ARIA COMPRESSA

4. CONTROL PORT
STEUERANSCHLUSS
ORIFICE DE COMMANDE
ORIFIZIO DI COMANDE

* CAN BE REVEIVED OPTIONALLY AS ACCESSORY:
WAHLWEISE ALS ZUBEHOER ERHAELTLICH:
ASSESSOIRE EN OPTION:
POU'ESSERE RICHIESTO COME ASSESSORIO: 432 407 011 0

HEATING HEIZUNG CHAUFFAGE RISCALDAMENTO	INRUSH - TEMPERATURE EINSCHALT - TEMPERATUR TEMPERATURE DE FERMETURE TEMPERATURA DI CHIUSURA 7° ± 6°C	CUT-OFF - TEMPERATURE AUSSCHALT - TEMPERATUR TEMPERATURE DE MISE TEMPERATURA DI APERTURA 29,5° ± 3°C

FURTHER TECHNICAL DATA SEE
IDENTIFICATION No.
CODE FOR DOCUMENT 605 SHEET TO

GENERAL TOLERANCES

CLASS	RANGE OF NOMINAL DIMENSION* (in mm)					
	≤3	>3 ≤30	>30 ≤400	>400 ≤1000	>1000	
I		0,5	1	1,5	2	
II	×	1	2	3	4	±30'
III		2	3,5	5	6,5	

TAPPED HOLES ALL ISO 4009 / JED 152
* TOLERANCE CLASS APPLIED CROSSMARKED

SKN No. REV DATE

COPYRIGHT
DATE 07.04.97 DRAWN Röver SIGNATURE
CHECKED
STANDARDIZATION

WABCO CLAYTON DEWANDRE

AIR DRYER
LUFTTROCKNER
SECHEUR D'AIR
ESSICCATORE D'ARIA

MASS kg | SCALE 1:1 | PRODUCT IDENTIFICATION 432 431 008 0 | CODE FOR DOCUMENT 605 | SHEET 1/1
SIZE A1 | TYP 140 | CODE F. PROD. GROUP 505 | CODE FOR SHAPE | REPLACEMENT FOR