COMBINED UNLOADER: / DRUCKREGLER: / REGULATEUR DE PRESS.: / GRUPPO DI REGULAZIONE:	CUT OUT PRESSURE / ABSCHALTDRUCK / PRESSION DE DECL. / PRESSIONE D'APERT. (bar)	OPERATING RANGE / SCHALTSPANNE / PLAGE DE REGULATION / GAMME DE REGUL.	DYNAMIC PRESSURE OF THE SAFETY VALVE / STAUDRUCK DES SICHERHEITSVENTILES / PRESSION DYNAMIQUE DU SOUPAPE DE SECURITE / PRESSIONE DINAMICA DELLA VALVOLA DI SICUREZZA (bar)
	$12,5^{\pm 0,2}$	$1,3^{+0,7}_{0}$	14.0^{+4}_{0} bar (BEI $V_n^{\cdot}$=100dm³/min.)

1	FROM THE COMPRESSOR / VOM KOMPRESSOR / PROVENANT DU COMPRESSEUR / PROVENIENTE DEL COMPRESSORE	M22 x1.5	Mmax = 53 Nm
2	TO THE AIR RESERVOIRS / ZU DEN LUFTBEHAELTERN / AUX RESERVOIRS D'AIR / AL SERBATOI D'ARIA	M22 x1.5	Mmax = 53 Nm
31 / 32 / 33	EXHAUST FOR COMPRESSED AIR / ENTLUEFTUNG FUER DRUCKLUFT / ECHAPPEMENT POUR AIR COMPRIME / SCARID PER ARIA COMPRESSA	—	—
Ⓔ 6.1 / 6.2	SOLENOID / VENTILMAGNE / L'AIMANT / SOLENOIDE — NOMINAL CURRENT / NENNSTROM / COURANT NOMINAL / CORRENTE NOMINALE	In = 0.6A	—

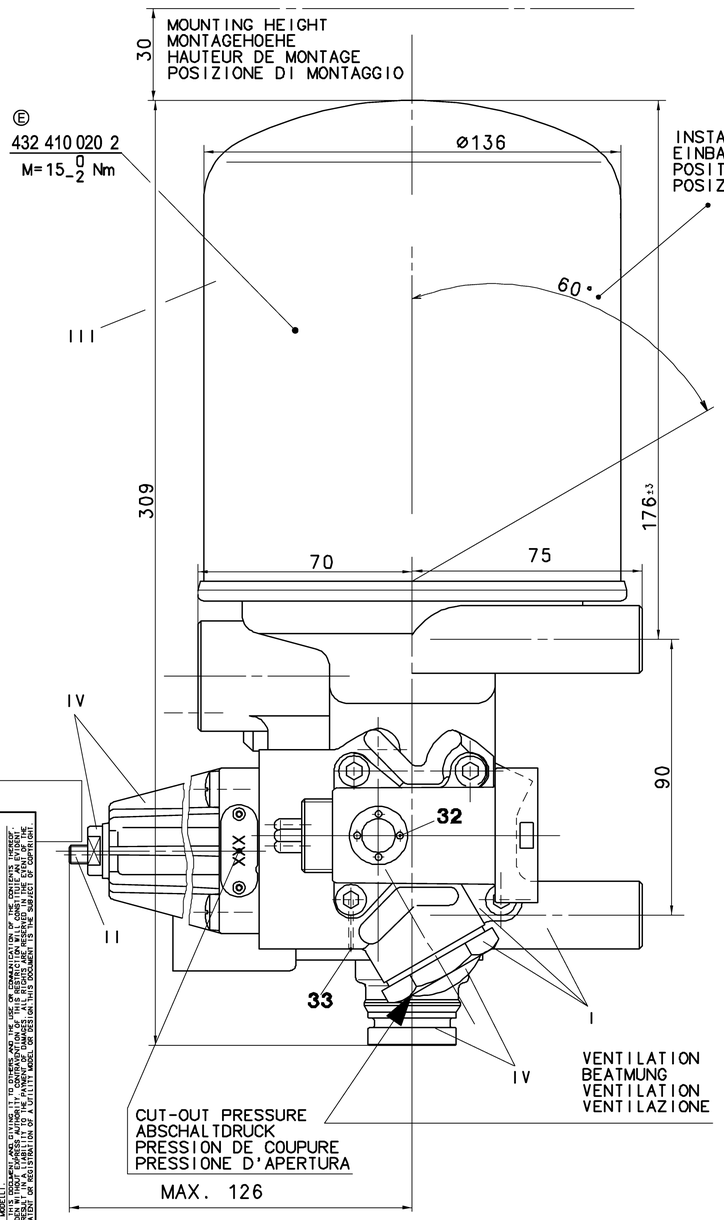

INSTALLATION POSITION / EINBAULAGE / POSITION D' INSTALLATION / POSIZIONE DI MONTAGGIO

MEDIUM: COMPRESSED AIR
MEDIUM: DRUCKLUFT
FLUIDE: AIR COMPRIME
FLUIDO: ARIA COMPRESSA

SERVICE CONDITION / BETRIEBSART / CONDITION DU SERVICE / CONDIZIONE DI SERVIZIO: CONTINUOS SERVICE / DAUERBETRIEB / SERVICE CONTINU / SERVIZIO CONTINUO

THE VALVE CORRESPONDS TO THE REGULATIONS FOR ELECTROMAGNETIC DEVICES ACCORDING TO VDE 0580

DAS GERAET ENTSPRICHT DEN BESTIMMUNGEN FUER ELEKTROMAGNETISCHE GERAETE NACH VDE 0580

LE VALVE CORRESPOND AUX CONDITIONS POUR DES APPAREILS ELECTROMAGNETIQUES SUIVANT VDE 0580

LA VALVOLA CORRISPONDE ALLE CONDIZIONI PER APPARECCHI ELETTROMAGNETICHI SECONDO VDE 0580

TYPE OF PROTECTION ACCORD TO DIN 40050 SHEET 9 :
SCHUTZART NACH DIN 40050 BLATT 9 :
MODE DE PROTECTION SUIVANT DIN 40050 FEUILLE 9 :
TIPO DI PROTEZIONE SECONDO DIN 40050 FOGLIO 9 :
IP 66 A

VOLTAGE : / SPANNUNG : / VOLTAGE : / VOLTAGGIO : $24^{+6,0}_{-2,4}$V DC

THERMAL RANGE OF CONTINUOUS APPLICATION: / THERMISCHER DAUERANWENDUNGSBEREICH: / PLAGE DE TEMPERATURE EN UTILISATION CONTINUE: / COMPO DI APPLICAZIONE CONTINUA: -40°C....+65°C

WORKING PRESSURE: / BETRIEBSDRUCK: / PRESSION DE SERVICE: / PRESSIONE D' ESERCIZIO: pemax.=13bar

MAX. PERMISSIBLE FREQUENCY / MAX. ZULAESSIGE FREQUENZ / MAX. ADMISSIBLE FREQUENZE / MAX. AMMISSIBLE FREQUENZA: 50 Hz

RESISTANCE TO HEAT: / WAERMEBESTAENDIGKEIT: / RESISTANCE A LA CHALEUR: / RESISTANZA AL CALORE: MAX.+80°C

MAX. PERMISSIBLE ACCLERATION: / MAX. ZULAESSIGE BESCHLEUNIGUNG: / ACCELERATION MAX. ADMISSIBLE: / ACCELERAZIONE MAX. AMMESSA: ±10×g

Ⓔ

EXTERNAL SURFACE / AEUSSERE OBERFLAECHE / SURFACE EXTERIEURE / SUPERFICIE ESTERNA	
I	JED-259
II	JED-256
III	JED-471 SCHWARZ/BLACK
IV	KUNSTSTOFF
V	JED-570.656
VI	JED-260

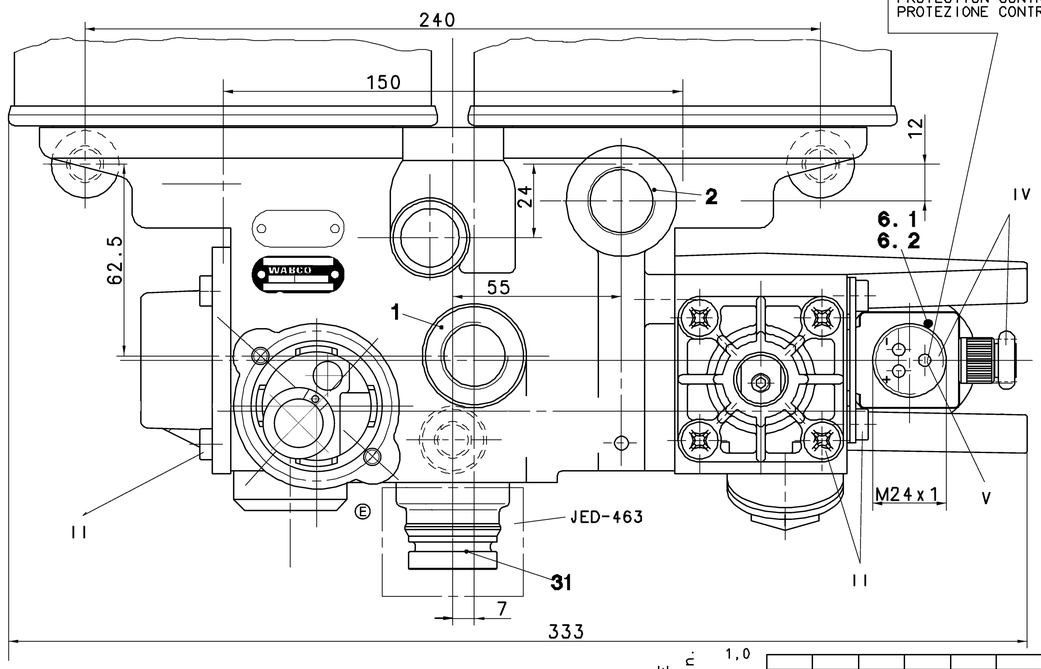

TORSION PROTECTION / VERDREHSICHERUNG / PROTECTION CONTRE TORSION / PROTEZIONE CONTRA

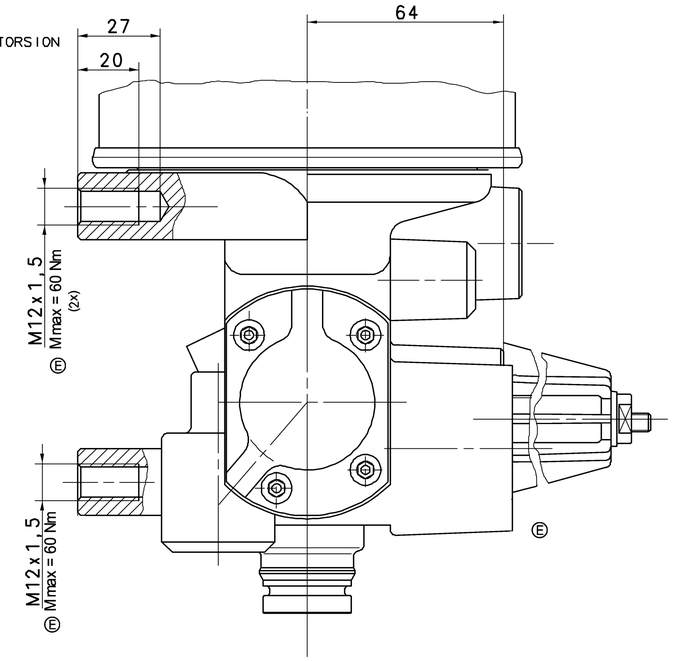

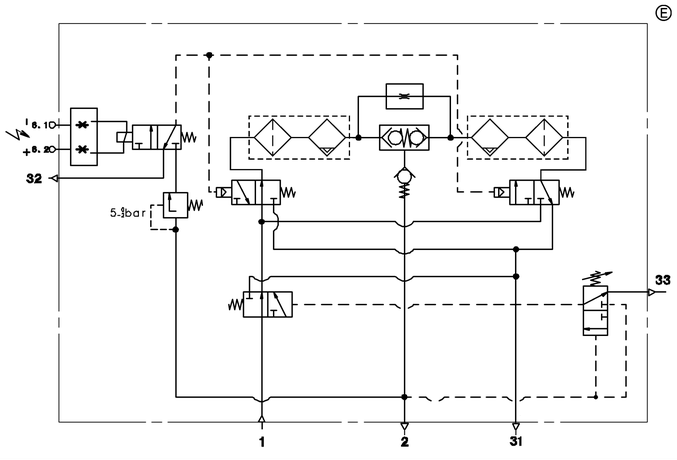

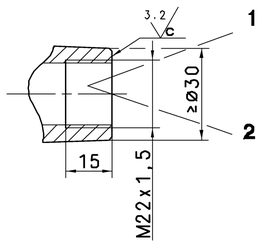

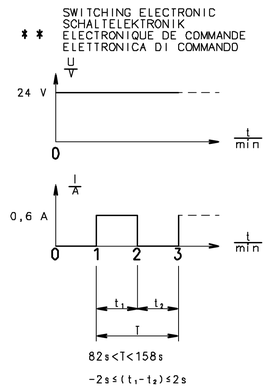

MAX. PERMISSIBLE DELIVERY OF THE COMPRESSORE
ZULAESSIGE MAXIMALE FOERDERMENGE
DEBIT MAX. ADMIS DU COMPRESSEUR
PORTATA MAX. AMMESSA DEL COMPRESSORE

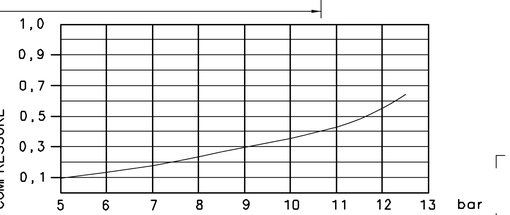

CUT - OUT PRESSURE
ABSCHALTDRUCK
PRESSION DE DECLENCHEMENT
PRESSIONE DI APERTUR

General Specification: JED-334-0						
Further Technical Data: Product Specification						
Doc. Code: 035			Sheet	To		
General Tolerances JED-261						
		Range of Nominal Dimensions (± mm)				
Class 1)		≤ 50	> 50 ≤ 180	> 180 ≤ 400	> 400	
Fine		0.5	1.0	1.5	2.0	
Medium	X	1.0	2.0	3.0	4.0	±3°
Coarse		2.0	3.5	5.0	6.5	
Tapped Holes acc. JED-152						
1) Tolerance Class Applied Crossmarked						

Copyright WABCO

Date	Signature
Drawn 2012-02-10	OBUSZYNSKI
Checked 2013-08-08	CHAMOT
Expert	ZAWISZA

WABCO

AIR DRYER
LUFTTROCKNER
DESSICATEUR D'AIR
ESSICATORE D'AIRA

Mass	Scale	Material No.	Date of first issue		
Ⓔ 9.4 KG	1:1	432 432 018 0	Doc.Code 005	Language ML	Sheet 1/1
Size A1	CAD System TIF				
		EDM No. 156670	Revision 9x E	Techn. Resp. 5053	Replacement for

100mm

TOUTE COMMUNICATION OU REPRODUCTION DE CE DOCUMENT, TOUTE EXPLOITATION OU COMMUNICATION DE SON CONTENU OU DE PARTIES DE CELUI-CI SONT INTERDITES SAUF AUTORISATION ECRITE. TOUS DROITS DE PROPRIETE INDUSTRIELLE ET INTELLECTUELLE RESERVES. NON E PERMESSO CONSEGNARE A TERZI O RIPRODURRE QUESTO DOCUMENTO, NE UTILIZZARE IL CONTENUTO O RENDERE ACCESSIBILE A TERZI PARTI DI QUESTO DOCUMENTO. TUTTI I DIRITTI DI PROPRIETA' INTELLETTUALE SONO RISERVATI. WITHOUT WABCO'S WRITTEN AUTHORITY, THIS DOCUMENT MUST NOT BE COPIED OR REPRODUCED IN ANY WAY, NOR MADE ACCESSIBLE TO THIRD PARTIES, NOR ITS CONTENTS EXPLOITED OR COMMUNICATED. ALL INTELLECTUAL PROPERTY RIGHTS ARE RESERVED. WELTGEHEIMSCHUTZVERMERK: DIESES DOKUMENT DARF WEDER VERVIELFAELTIGT NOCH DRITTEN ZUGAENGLICH GEMACHT WERDEN, DER INHALT DIESES DOKUMENTES DARF WEDER VERWENDET NOCH MITGETEILT WERDEN. ALLE RECHTE FUER DEN FALL DER PATENTERTEILUNG ODER EINTRAGUNG VORBEHALTEN.