PART CODE	MATERIAL	SURFACE PROTECTION
I	ALUMINIUM ALLOY	CHROMATED
II	CHROMATED	PASSIVATED
III	STEEL	PAINTED
IV	PLASTIC	NO TREATMENT
V	BRASS	TIN AND COPPER COATING
VI	THERMOPLASTIC	NO TREATMENT
VII	BRASS	NO TREATMENT
VIII	PVC	NO TREATMENT

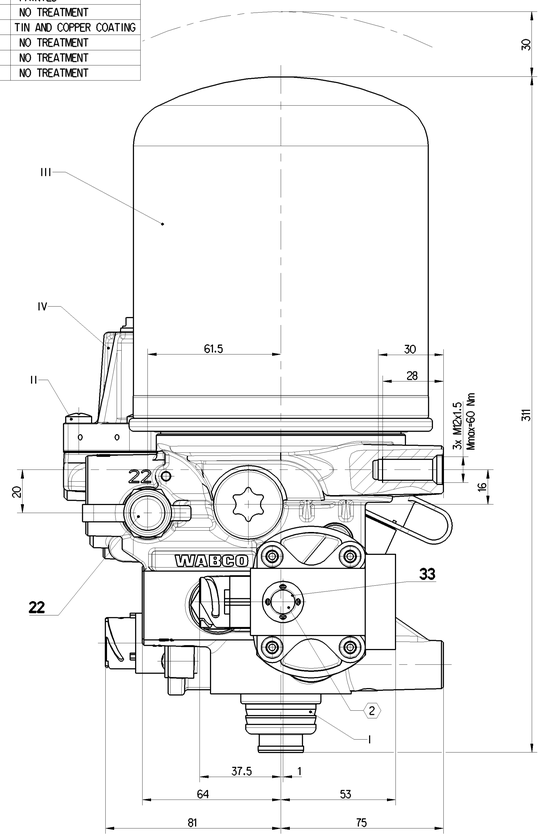

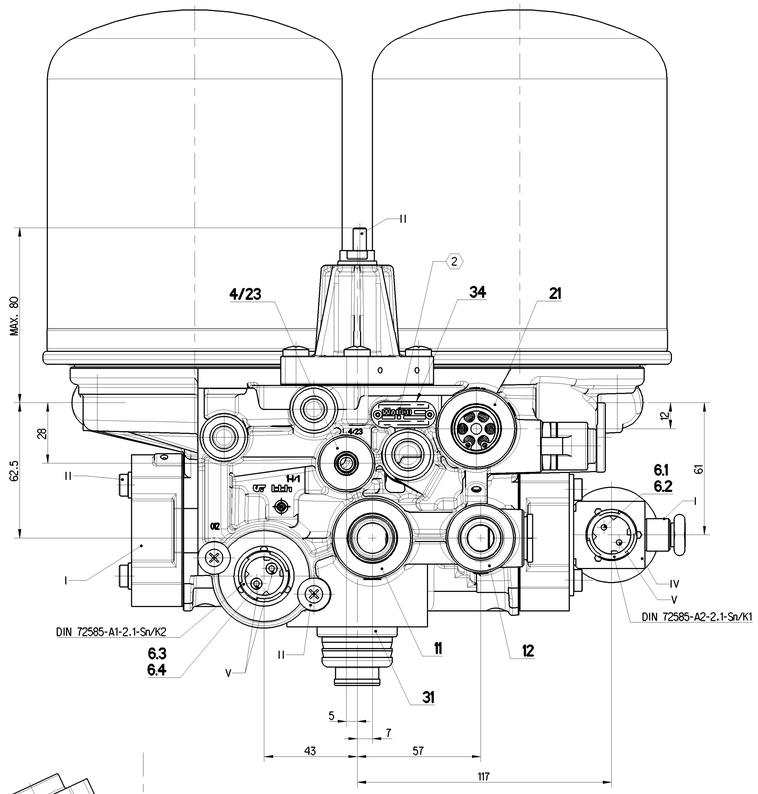

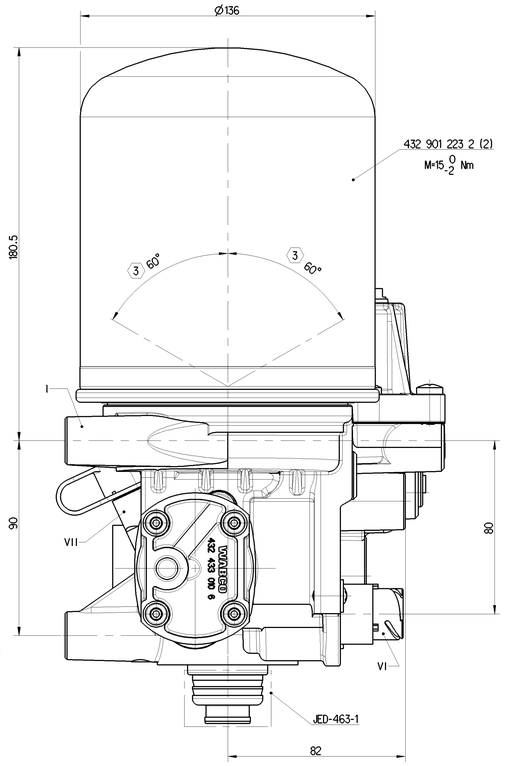

6.1 6.2	SOLENOID VENTILMAGNET L'AIMANT SOLENOIDE	NOMINAL CURRENT: NENNSTROM: COURANT NOMINAL: CORRENTE NOMINALE: In=0.6A BATTERY VOLTAGE: BATTERIESPANNUNG: TENSION DE BATTERIE: TENSIONE DI BATTERIA: 24 +8/-2.4 V DC
6.3 6.4	HEATING HEIZUNG CHAUFFAGE RISCALDAMENTO	HEATING CUT-IN TEMPERATURE: HEIZUNG EINSCHALT-TEMPERATUR CHAUFFAGE TEMPERATURE DE FERMETURE: RISCALDAMENTO TEMPERATURA DI CHIUSURA: 7 ±6°C HEATING CUT-OFF TEMPERATURE: HEIZUNG AUSSCHALT-TEMPERATUR: CHAUFFAGE TEMPERATURE DE MISE: RISCALDEMENTO TEMPERATURA DI APERTURA: 29.5 ±3°C NOMINAL POWER: NENNLEISTUNG: PULSSBANCE NOMINAL: POTENZA NIMINALE: 100 W POWER WITH 24V DC: LEISTUNG BEI 24V DC: PUISSANCE AVEC 24V DC: POTENZA CON 24V DC: 95 +0/-5W BATTERY VOLTAGE: BATTERIESPANNUNG: TENSION DE BATTERIE: TENSIONE DI BATTERIA: 24 +4.8/-2.4 V DC

Cleanliness requirements / Restschmutzanforderungen			
Cleanliness requirements and test cleaning method referring to DBL 6515 and 6516 Restschmutzvorgaben und Restschmutzreinigungsverfahren nach DBL 6515 und 6516			
Size Range/ Partikelgrößen-klasse	Size of particle/ Partikelgröße [µm]	Contamination Category/ Kontaminations-Schlüssel	quantity per 1.000cm² / Partikelanzahl je 1.000cm² maximal
F	100 ≤ x < 150	8	250
G	150 ≤ x < 200	6	64
H	200 ≤ x < 400	5	32
I	400 ≤ x < 600	4	16
J	600 ≤ x < 1000	3	8
K	1000 ≤ x	00	0

THERMAL RANGE OF CONTINUOUS APPLICATION:
THERMISCHER DAUERANWENDUNGSBERREICH:
PLAGE DE TEMPERATURE EN UTILISATION CONTINUE:
COMPO DI APPICAZIONE CONTINUA: -40°C... +65°C

RESISTANCE TO HEAT:
WAERMEBESTAENDIGKEIT:
RESISTANCE A LA CHALEUR:
RESISTANZA AL CALORE: +80°C MAX.

MEDIUM: COMPRESSED AIR
MEDIUM: DRUCKLUFT
FLUIDE: AIR COMPRIME
FLUIDO: ARIA COMPRESSA

WORKING PRESSURE:
BETRIEBSDRUCK:
PRESSION DE SERVICE:
PRESSIONE D' ESERCIZIO: Pe MAX. = 13 bar

MAX. PERMISSIBLE FREQUENC
MAX. ZULAESSIGE FREQUENZ
MAX. ADMISSIBLE FREQUENZE
MAX. AMMISIBLE FREQUENZA 50 Hz

MAX. PERMISSIBLE ACCERELATION
MAX. ZULAESSIGE BESCHLINIGUNG
ACCELERATION MAX. ADMISSIBLE
ACCELERAZIONE MAX. AMMESA ± 10 xg

SERVICE CONDITION : CONTINUOS SERVICE
BETRIEBSART : DAUERBETRIEB
CONDITION DU SERVICE : SERVICE CONTINU
CONDIZIONE DI SERVIZIO : SERVIZIO CONTINUO

SAFETY VALVE
SICHERHEITSVENTIL
SOUPAPE DE SECURITE
VALVOLA DI SICUREZZA

OPENING PRESSURE
OEFFNUNGSDRUCK
PRESSION D' OUVERTURE
PRESSIONE DI APERTURA 14.5 +2.5 -0 bar
(Vn max.=1200 dm³/min)

CUT-OUT PRESSURE
ABSCHALTDRUCK
PRESSION DE COUPURE
PRESSIONE DI DISINSERIMENTO Pe= 12±0.3 bar

OPERATING RANGE
ARBEITSBEREICH
GAMME DE FONCTIONNEMENT
GAMMA DI FUNZIONAMENTO dP= 1.5±0.25 bar

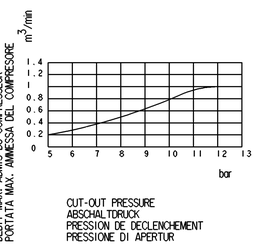

PORT ANSCHLUSS ORIFICE ORIFIZIO	FUNCTION FUNCTION FONCTION FUNZIONE	THREAD GEWINDE FILETAGE FILETTAURA	TORQUE ANZUGSMOMENT COUPLE DE SERRAGE COPPIA DI SERRAGGIO
11	EXTERNAL FILLING (ALTERNATIVE: COMPRESSOR) FREMDBEFUELLUNG (AUSWEICHE: KOMPRESSOR) ALIMENTATION DE L'EXTERIEUR (REMPLACEMENT: COMPRESSEUR) ALIMENTAZIONE SEPERATA (SOSTITUZIONE: COMPRESSORE)	M22x1,5 JED-388-3	MAX 53 Nm
12	FROM THE COMPRESSOR (ALTERNATIVE: EXTERNAL FILLING) VON KOMPRESSOR (AUSWEICHE: FREMDBEFUELLUNG) PROVENANT DU COMPRESSEUR (REMPLACEMENT: ALIMENTATION DE L'EXTERIEUR) PROVENIENTE DEL COMPRESSORE(SOSTITUZIONE: ALIMENTAZIONE SEPERATA)	M22x1,5 d=16	MAX 53 Nm
21	TO PROTECTION VALVE ZUM SCHUTZVENTIL AU VALVE DE PROTECTION A VALVOA DI PROTEZIONE	M22x1,5 JED-388-3	MAX 53 Nm
22	TYRE INFLATION DEVICE REIFENFUELLANSCHLUSS PRISE POUR GONFLAGE PNEU PRESA PER GONFIAGGIO PNEUM	-	-
4/23	CONTROL PORT STEUERANSCHLUSS ORIFICE DE COMMANDE ORIFIZIO DI COMANDO (1)	M10x1 JED-388-1	MAX 13 Nm
31/32 33/34	EXHAUST FOR COMPRESSED AIR ENTLUEFTUNG FUER DRUCKLUFT ECHAPPEMENT POUR AIR COMPRIME SCARICO PER ARIA COMPRESSA (2)		

(1) DELIVERY VOLUME max 80 cm³
AUSGESTEUERTES VOLUMEN
VOLUME DELIVRE
VOLUME EROGATO

(2) FREE FROM PAINT
FARBFREI
EXEMPTE DE PEINTURE
NON VERNICIARE

(3) INSTALLATION POSITION
EINBAULAGE
POSITION D' INSTALLATION
POSIZIONE DI MONTAGGIO

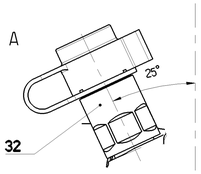

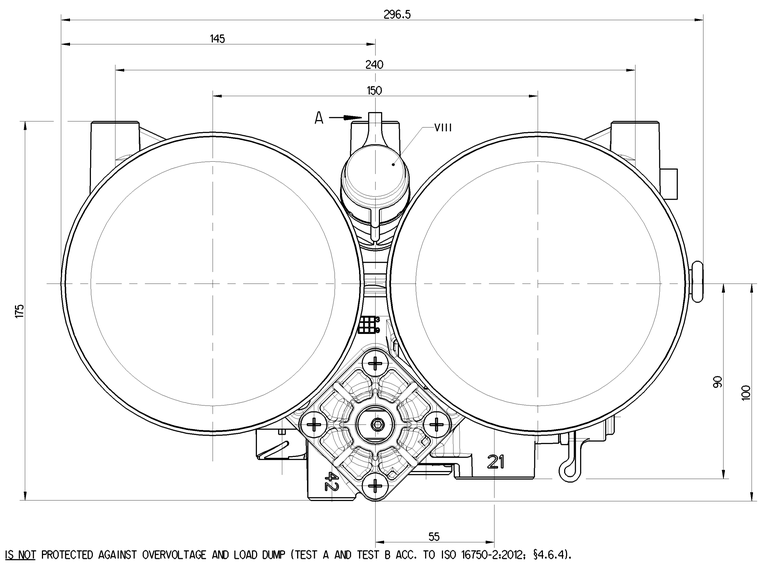

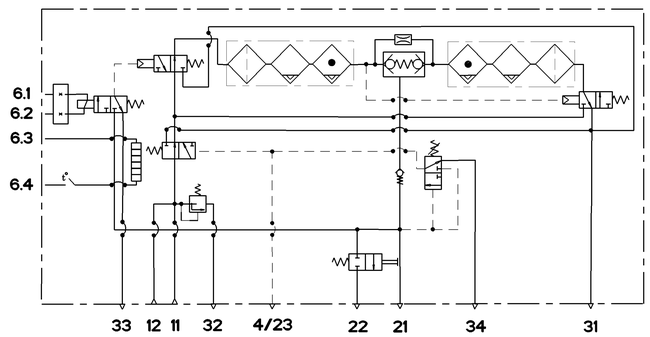

SWITCHING ELECTRONIC
SCHALTELEKTRONIK
ELECTRONIQUE DE COMMANDE
ELETTRONICA DI COMMANDO

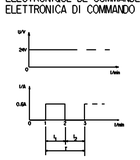

82s<T<158s
-2s<=(t1-t2)<=2s

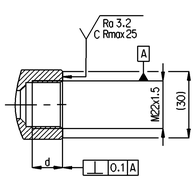

THE VALVE CORRESPONDS TO THE REGULATIOS FOR ELEKTROMAGNETIC DEVICENS ACCORDING TO VDE 0580 : TYPE OF PROTECTION ACCORD TO DIN 40050 SHEET 9

DAS GERAET ENTSPRICHT DEN BESTIMMUNGEN FUER ELEKTROMAGNETISCHE GERAETE NACH VDE 0580 : SCHULTZART NACH DIN 40050 BLATT 9

LE VALVE CORRESPOND AUX CONDITIONS POUR DES APPARECCHI ELEKTROMAGNETICHI SECONDO VDE 0580 : MODE DE PROTECTION SUIVANT DIN 40050 FEUILLE 9

LA VALVOLA CORPISPONDE ALLE CONDIZIONI PER APPARECCHI ELETTROMAGNETICHI SECONDO VDE 0580 : TIPO DI PROTEZIONE SECONDO DIN 40050 FOGLIO 9

IP 66 A

THE DEVICE IS NOT PROTECTED AGAINST OVERVOLTAGE AND LOAD DUMP (TEST A AND TEST B ACC. TO ISO 16750-2:2012; §4.6.4).

DAS GERÄT IST NICHT GESCHÜTZT GEGEN ÜBERSPANNUNG UND LOAD DUMP (TEST A UND TEST B NACH ISO 16750-2:2012; §4.6.4).

L'APPAREIL N'EST PAS PROTÉGÉ CONTRE LA SURTENSION ET LOAD DUMP (ESSAI A ET TEST B SELON ISO 16750-2:2012; §4.6.4).

IL APPARECCHIO NON È PROTETTO CONTRO LA SOVRATENSIONE E LOAD DUMP (PROVA A E B SECONDO ISO 16750-2:2012; §4.6.4).

General Specification: JED-334-1 , Size ISO 14405 LP						
Further Technical Data: Product Specification						
Doc. Code: C35				Sheet: 1	Tp 3	
General Tolerances JED-261						
Class 1)	Range of Nominal Dimensions (± mm)					
	≥ 50	> 50 ≤ 80	> 80 ≤ 400	> 400 ≤ 1000		
Fine	0.5	1.0	1.5	2.0		
Medium X	1.0	2.0	3.0	4.0	±3°	
Coarse	2.0	3.5	5.0	6.5		
Tapped Holes acc. JED-152 / -JED-388						
1) Tolerance Class Applied Crosswinded						

Copyright WABCO®

Date	Signature	
Drawn 2020-09-03	Kurzynski	
Checked 2020-09-08	Kosirzewo	
Appr. Puto		

WABCO

TWIN-CHAMBER AIR DRYER
2-KAMMER LUFTTROCKNER
DESSICCATEUR A DEUX CHAMBRES
ESSICATORE A DUE CAMERE

Mass	Scale	Material No.	Date of first issue	
8.5 (kg)	1:1	432 433 062 0	2019-10-27	
Size	CAD System		Doc.Code / Language	Sheet
A 0	CREO		005 ML	1/1
ECN No.	Revision	Techn. Repl.	Replacement for	
503003	3 x C	5051		

100mm