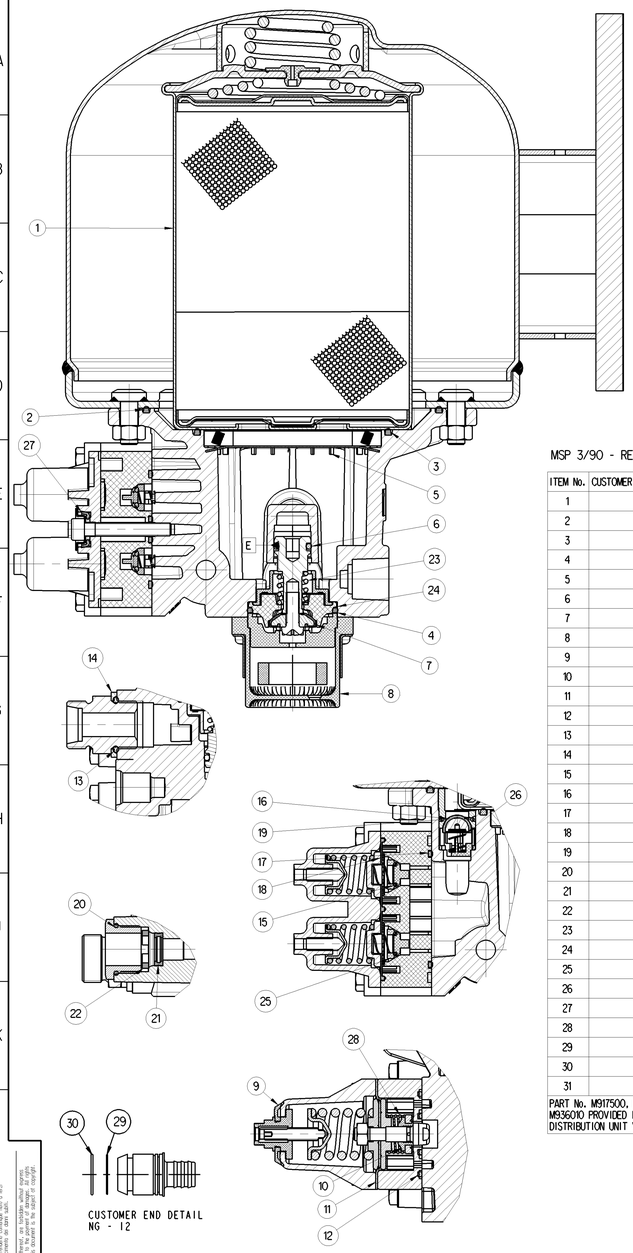

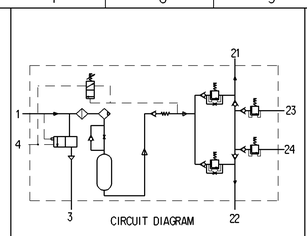

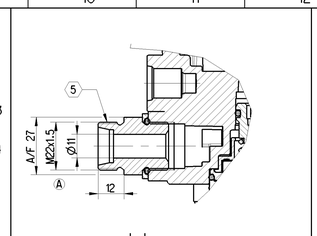

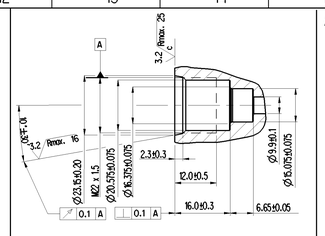

ASSEMBLY PROCEDURE:

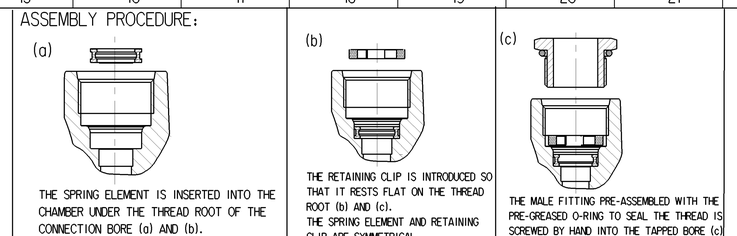

‹1› SAFETY CHARACTERISTICS	0
‹2› SIGNIFICANT CHARACTERISTICS	2 X

MSP 3/90 - REPAIR KIT CONSIST OF ITEMS SHOWN

ITEM No.	CUSTOMER PART No.	WABCO PART No.	DESCRIPTION.	QTY.
1		4324700022	DESICCANT CARTRIDGE	1
2		M932980	SEALING RING	1
3		M932990	SEALING RING	1
4		M924970	SEALING RING	1
5		M341260	FILTER RETAINER	1
6		M630720	SEALING RING	1
7		M311980	VALVE	1
8		M312100	SILENCER ASSEMBLY	1
9		M342490	EXHAUST FLAP	1
10		M310880	VALVE	1
11		M334870	DIAPHRAGM	1
12		M341200	GASKET	1
13		M912620	SEALING RING	1
14		M925940	SPECIAL WASHER	1
15		M912400	SEALING RING	6
16		M312050	VALVE	1
17		M341210	GASKET	1
18		M311600	DIAPHRAGM	1
19		M912090	SEALING RING	1
20		M932700	SEALING RING NG-12	4
21		M932720	SPRING ELEMENT	4
22		M932730	RETAINING CLIP	4
23		M335010	COMPRESSION SPRING	1
24		M341170	VALVE SEAT	1
25		M339490	VALVE	6
26		M336900	COMPRESSION SPRING	7
27		M312040	LIP SEAL	1
28		M833010	INLET VALVE SPRING	1
29		M935980	SEALING RING NG-12	4
30		M935990	SEALING RING NG-12	4
31		M929560	GREASE SACHET	2

PART No. M917500, M910680, M331600, M932770, M932780, M932760, M936000 AND M936010 PROVIDED IN THE KIT TO STANDARDISE THE REPAIR KIT FOR DRYING AND DISTRIBUTION UNIT VARIENTS.

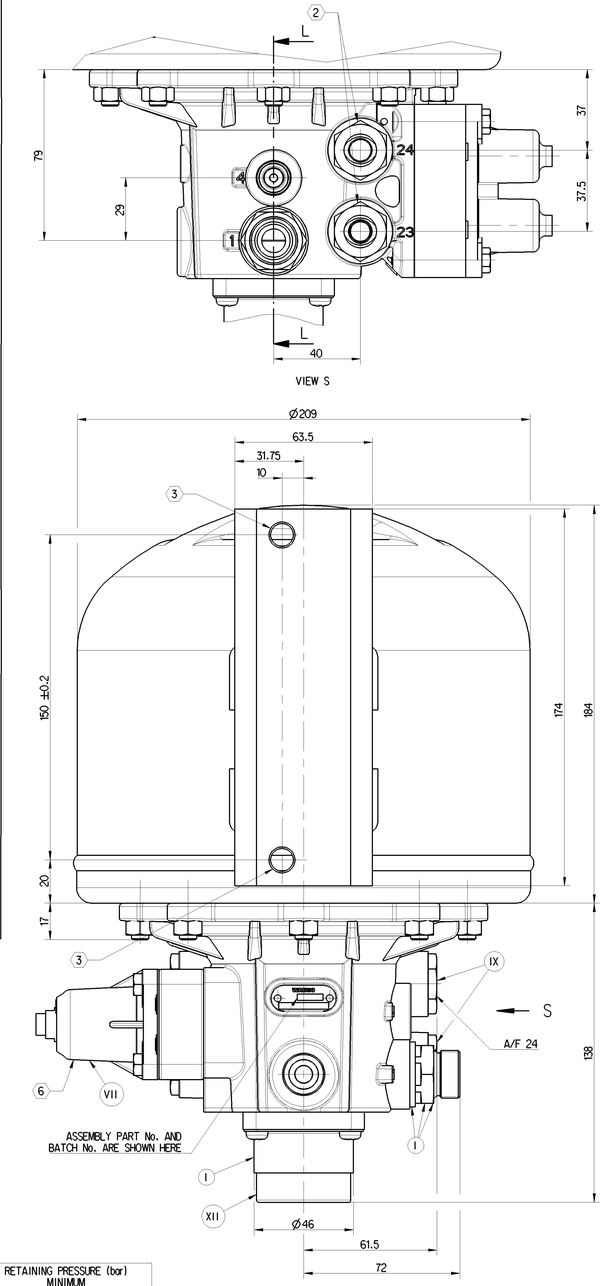

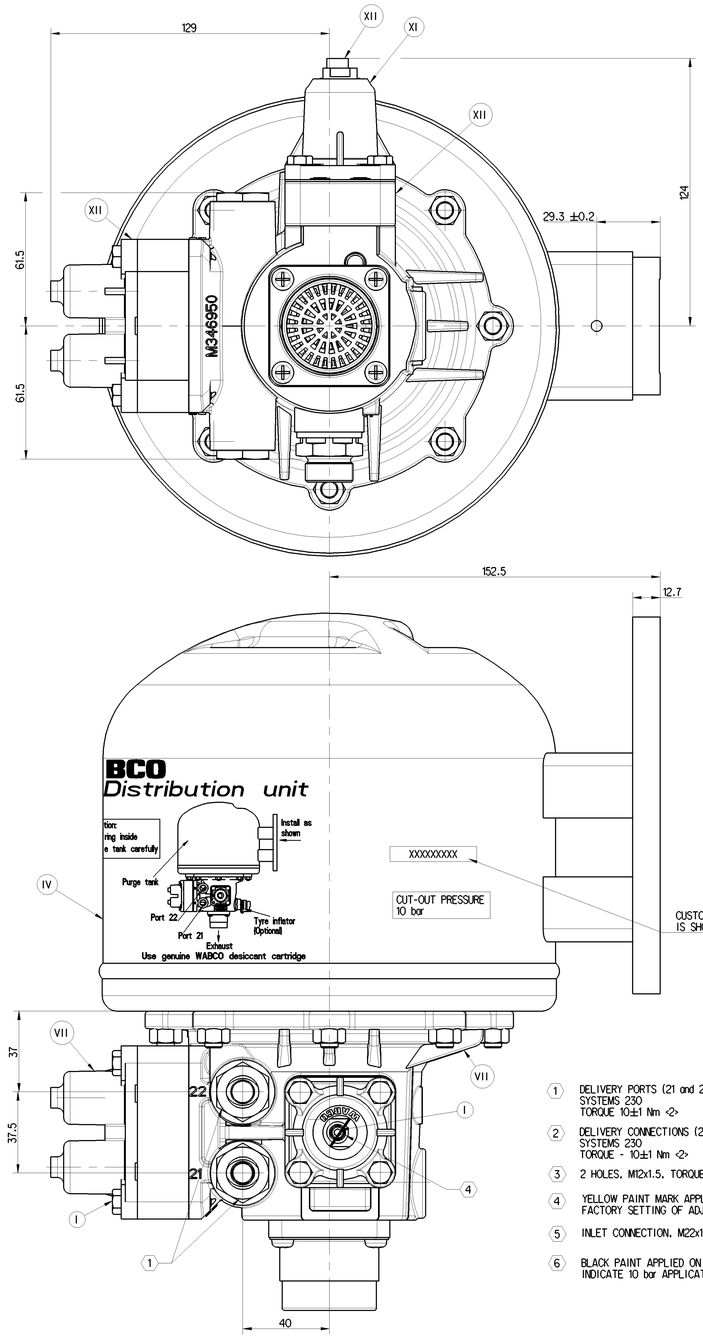

1. DELIVERY PORTS (21 and 22) M22x1.5, TO SUIT VOSS PLUG IN SYSTEMS 230 TORQUE 10±1 Nm ‹2›
2. DELIVERY CONNECTIONS (23 AND 24) M22x1.5, TO SUIT VOSS PLUG IN SYSTEMS 230 TORQUE - 10±1 Nm ‹2›
3. 2 HOLES, M12x1.5, TORQUE 82.5±4.5 Nm
4. YELLOW PAINT MARK APPLIED TO INDICATE FACTORY SETTING OF ADJUSTMENT SCREW.
5. INLET CONNECTION, M22x1.5, TORQUE 50.5±2.5 Nm
6. BLACK PAINT APPLIED ON THIS SURFACE TO INDICATE 10 bar APPLICATION

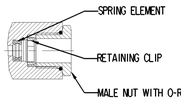

DESCRIPTION	M22X1.5 VOSS PART No.
MALE NUT WITH O-RING	00 62 03 99 00
RETAINER CLIP	00 62 01 99 00
SPRING ELEMENT	00 62 05 99 00

SL.No.	NOTES	
1	PRODUCT FUNCTION AND RELIABILITY	
1.1	MINIMUM PRESSURE DIFFERENCE BETWEEN CUT-OUT AND CUT-IN PRESSURE	0.9 bar
1.2	BLOW OFF PRESSURE	14.25 ±2.25 bar
1.3	EQUIVALENT FLOW DIAMETER	7mm
1.4	NOISE LEVEL WHEN TESTED AS PER PSSC 162C	≤ 72dBA
1.5	THERMAL RANGE OF APPLICATION	- 40°C TO +80°C
1.6	CORROSION RESISTANCE	240 HOURS OF NSS
2	QUALITY COMPLIANCE TESTS WILL BE CARRIED OUT REGULARLY AS PER CLAUSE No. 18 OF PSSC 270C	
3	SERVICE LIFE TO FIRST OVERHAUL - 3 YEARS / 300000 KM WHICHEVER IS EARLIER IF FITTED AS PER RECOMMENDED LAYOUT.	
4	OPEN PORTS/MALE THREADS ARE FITTED WITH CLOSURE PLUGS/ CLOSURE SLEEVE FOR STORAGE AND TRANSIT PURPOSES	

ASSY.No.	CUT OUT PRESSURE ±0.2 (bar)	CUT IN PRESSURE min. (bar)	DYNAMIC OPENING PRESSURE (bar) + 0.3 - 0.0 ELEMENT No (PORT No.)				RETAINING PRESSURE (bar) MINIMUM ELEMENT No (PORT No.)			
			1 (21)	2 (22)	3 (23)	4 (24)	1 (21)	2 (22)	3 (23)	4 (24)
4324700450	10	8.5	7.2	7.2	6.9	6.9	0	6.8	6.6	6.6
							6.8	0	6.6	6.6
							4.7	4.7	0	6.6
							4.7	4.7	6.6	0

XVII	STEEL	NO TREATMENT
XVI	CAST IRON	PLATED
XV	STEEL	ZINC IRON PLATED
XIV	CAST IRON	NO TREATMENT
XIII	ZINC ALLOY	ANODISED
XII	PLASTIC	NO TREATMENT
XI	RUBBER	NO TREATMENT
X	STAINLESS STEEL	NO TREATMENT
IX	BRASS	NO TREATMENT
VIII	ZINC ALLOY	CHROMATED
VII	ALUMINIUM ALLOY	ANODISED
VI	ALUMINIUM ALLOY	CHROMATED
V	CAST IRON	PAINTED
IV	STEEL	POWDER COATED
III	STEEL	PAINTED
II	STEEL	PHOSPHATED
I	STEEL	ZINC PLATED
PART MATERIAL CODE		SURFACE PROTECTION

General Specification: JED-334-1 , Size ISO 14405 LP
Further Technical Data:270C
Doc. Code:035 Sheet: 1 To 18
General Tolerances: JED-261

Class 1)	Range of Nominal Dimensions (in mm) ≤ 50	> 50 ≤ 180	> 180 ≤ 400	> 400	
Fine	0.5	1.0	1.5	2.0	±3°
Medium	1.0	2.0	3.0	4.0	
Coarse	2.0	3.5	5.0	6.5	

Tapped Holes acc.
1) Tolerance Class Applied Crossmarked

Copyright WABCO®

	Date	Signature
Drawn	2018-09-28	Suchoggr
Checked	2018-10-03	Sohul
Expert	Murugan S	

WABCO

DRYING AND DISTRIBUTION UNIT

Mass	Scale	Material No.	Date of first issue
7.5 kg	1:1	432 470 045 0	2017-09-12

Doc.Code	Language	Sheet
005	EN	1/1

Size	CAD System	ECN-No.	Revision	Techn. Resp.	Replacement for
A 0	CREO	178745	tx A	5057_WIN	-

100mm

Tale informatiile sa reproduce si a divulga, fara autorizatie a WABCO, este interzisa. Toate drepturile sunt rezervate. Nu se permite folosirea acestora pentru alte scopuri decat cele pentru care au fost trimise. Nu se permite copierea, nici partiala, a acestora, fara acordul prealabil al WABCO. Nu se permite folosirea acestora pentru alte scopuri decat cele pentru care au fost trimise. Nu se permite copierea, nici partiala, a acestora, fara acordul prealabil al WABCO.
Weitergabe sowie Vervielfältigung dieser Unterlage, Verwertung und Mitteilung ihres Inhalts nicht gestattet, soweit nicht ausdrücklich zugestanden. Zuwiderhandlungen verpflichten zu Schadenersatz. Alle Rechte für den Fall der Patenterteilung oder Gebrauchsmustereintragung vorbehalten.
This document is the property of WABCO. It may not be copied or made available to any other party without written consent. Any violation will be prosecuted. All rights are reserved in the event of the grant of a patent or registration of a utility model or design.