<1> SAFETY CHARACTERISTICS	0
<2> SIGNIFICANT CHARACTERISTICS	2 X

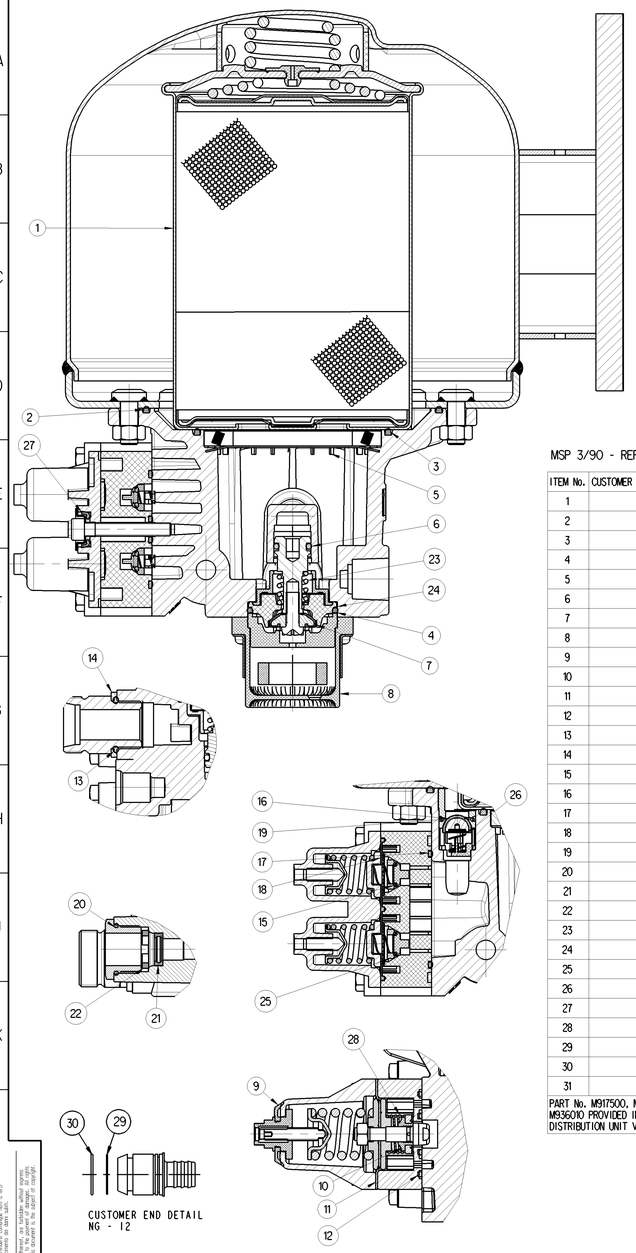

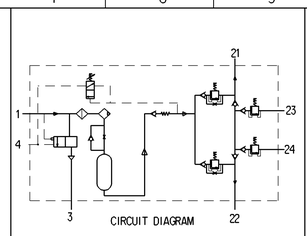

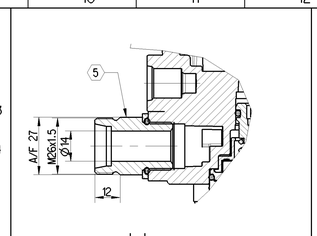

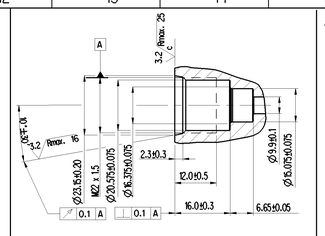

ASSEMBLY PROCEDURE:

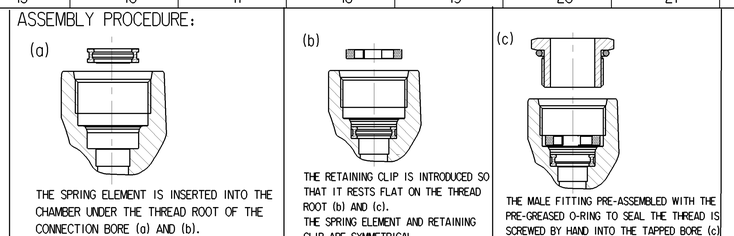

MSP 3/90 - REPAIR KIT CONSIST OF ITEMS SHOWN

ITEM No.	CUSTOMER PART No.	WABCO PART No.	DESCRIPTION.	QTY.
1		4324700022	DESICCANT CARTRIDGE	1
2		M932980	SEALING RING	1
3		M932990	SEALING RING	1
4		M924970	SEALING RING	1
5		M341260	FILTER RETAINER	1
6		M630720	SEALING RING	1
7		M311980	VALVE	1
8		M312100	SILENCER ASSEMBLY	1
9		M342490	EXHAUST FLAP	1
10		M310880	VALVE	1
11		M334870	DIAPHRAGM	1
12		M341200	GASKET	1
13		M912620	SEALING RING	1
14		M925940	SPECIAL WASHER	1
15		M912400	SEALING RING	6
16		M312050	VALVE	1
17		M341210	GASKET	1
18		M311600	DIAPHRAGM	1
19		M912090	SEALING RING	1
20		M932700	SEALING RING NG-12	4
21		M932720	SPRING ELEMENT	4
22		M932730	RETAINING CLIP	4
23		M335010	COMPRESSION SPRING	1
24		M341170	VALVE SEAT	1
25		M339490	VALVE	6
26		M336900	COMPRESSION SPRING	7
27		M312040	LIP SEAL	1
28		M833010	INLET VALVE SPRING	1
29		M935980	SEALING RING NG-12	4
30		M935990	SEALING RING NG-12	4
31		M929560	GREASE SACHET	2

PART No. M917500, M910680, M331600, M932770, M932780, M932760, M936000 AND M936010 PROVIDED IN THE KIT TO STANDARDISE THE REPAIR KIT FOR DRYING AND DISTRIBUTION UNIT VARIENTS.

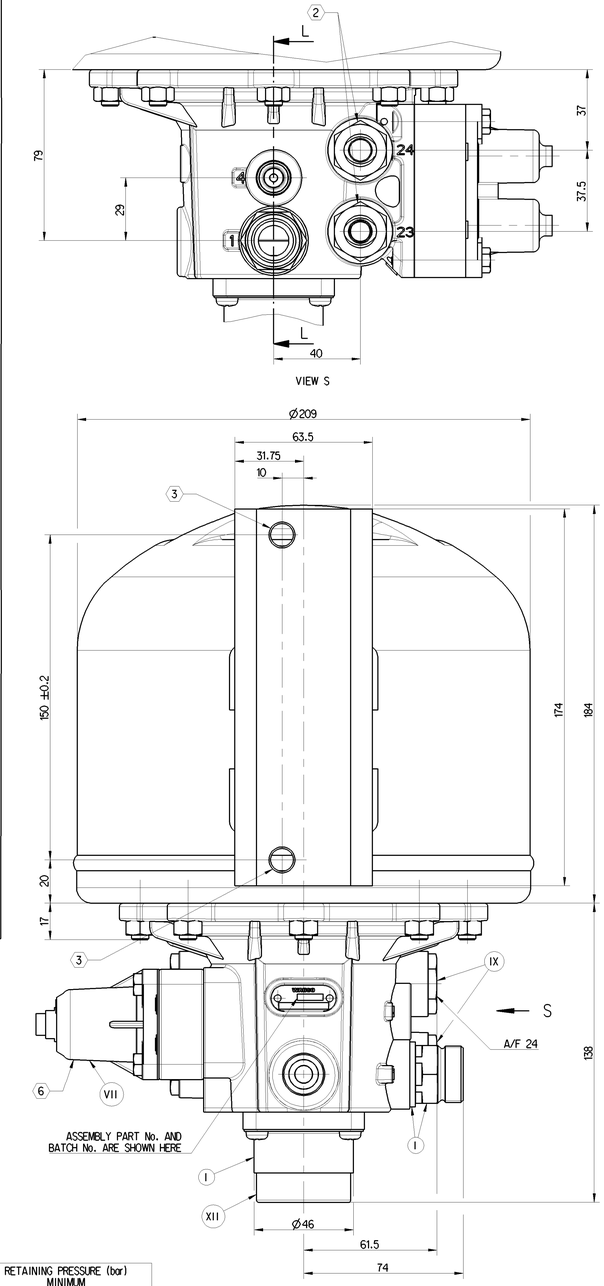

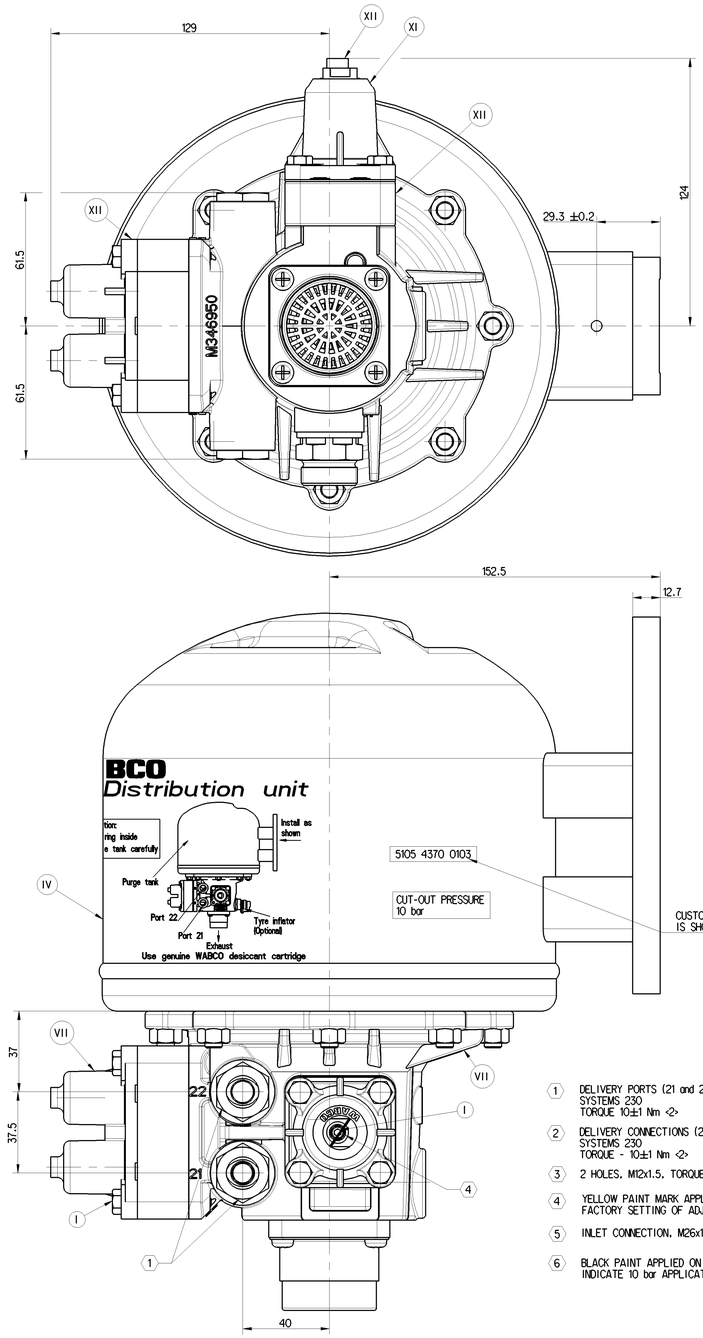

1. DELIVERY PORTS (21 and 22) M22x1.5, TO SUIT VOSS PLUG IN SYSTEMS 230 TORQUE 10±1 Nm <2>
2. DELIVERY CONNECTIONS (23 AND 24) M22x1.5, TO SUIT VOSS PLUG IN SYSTEMS 230 TORQUE - 10±1 Nm <2>
3. 2 HOLES, M12x1.5, TORQUE 82.5±4.5 Nm
4. YELLOW PAINT MARK APPLIED TO INDICATE FACTORY SETTING OF ADJUSTMENT SCREW.
5. INLET CONNECTION, M26x1.5, TORQUE 50.5±2.5 Nm
6. BLACK PAINT APPLIED ON THIS SURFACE TO INDICATE 10 bar APPLICATION

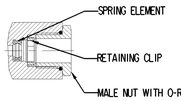

DESCRIPTION	M22X1.5 VOSS PART No.
MALE NUT WITH O-RING	00 62 03 99 00
RETAINER CLIP	00 62 01 99 00
SPRING ELEMENT	00 62 05 99 00

SL.No.	NOTES	
1	PRODUCT FUNCTION AND RELIABILITY	
1.1	MINIMUM PRESSURE DIFFERENCE BETWEEN CUT-OUT AND CUT-IN PRESSURE	0.9 bar
1.2	BLOW OFF PRESSURE	14.25 ±2.25 bar
1.3	EQUIVALENT FLOW DIAMETER	7mm
1.4	NOISE LEVEL WHEN TESTED AS PER PSSC 162C	≤ 72dBA
1.5	THERMAL RANGE OF APPLICATION	- 40°C TO +80°C
1.6	CORROSION RESISTANCE	240 HOURS OF NSS
2	QUALITY COMPLIANCE TESTS WILL BE CARRIED OUT REGULARLY AS PER CLAUSE No. 18 OF PSSC 270C	
3	SERVICE LIFE TO FIRST OVERHAUL - 3 YEARS / 300000 KM WHICHEVER IS EARLIER IF FITTED AS PER RECOMMENDED LAYOUT.	
4	OPEN PORTS/MALE THREADS ARE FITTED WITH CLOSURE PLUGS/ CLOSURE SLEEVE FOR STORAGE AND TRANSIT PURPOSES	

ASSY.No.	CUT OUT PRESSURE ±0.2 (bar)	CUT IN PRESSURE min. (bar)	DYNAMIC OPENING PRESSURE (bar) + 0.3 - 0.0 ELEMENT No (PORT No.)				RETAINING PRESSURE (bar) MINIMUM ELEMENT No (PORT No.)			
			1 (21)	2 (22)	3 (23)	4 (24)	1 (21)	2 (22)	3 (23)	4 (24)
4324700550	10	8.5	7.2	7.2	6.9	6.9	0	6.8	6.6	6.6
							6.8	0	6.6	6.6
							4.7	4.7	0	6.6
							4.7	4.7	6.6	0

XVII	STEEL	NO TREATMENT
XVI	CAST IRON	PLATED
XV	STEEL	ZINC IRON PLATED
XIV	CAST IRON	NO TREATMENT
XIII	ZINC ALLOY	ANODISED
XII	PLASTIC	NO TREATMENT
XI	RUBBER	NO TREATMENT
X	STAINLESS STEEL	NO TREATMENT
IX	BRASS	NO TREATMENT
VIII	ZINC ALLOY	CHROMATED
VII	ALUMINIUM ALLOY	ANODISED
VI	ALUMINIUM ALLOY	CHROMATED
V	CAST IRON	PAINTED
IV	STEEL	POWDER COATED
III	STEEL	PAINTED
II	STEEL	PHOSPHATED
I	STEEL	ZINC PLATED
PART CODE	MATERIAL	SURFACE PROTECTION

Ce document appartient à WABCO et ne doit pas être utilisé, reproduit, modifié, distribué ou communiqué à des tiers sans son autorisation préalable. Ce document est fourni à titre non contractuel. Sauf stipulation contraire, les informations qu'il contient ne constituent ni une offre de WABCO, ni une garantie de WABCO, ni une modification des conditions de vente en vigueur de WABCO. Les spécifications techniques, les descriptions et les illustrations contenues dans ce document sont aussi exactes que possible compte tenu de la connaissance du produit au moment de la rédaction du document. Elles ne sont pas contractuelles et WABCO se réserve le droit de les modifier sans préavis. Les informations techniques, les descriptions et les illustrations contenues dans ce document ne dispensent pas l'utilisateur de mettre en oeuvre son jugement et de vérifier par lui-même l'adéquation du produit à l'usage qu'il en fait. WABCO ne saurait être tenu pour responsable des conséquences d'une utilisation du produit non conforme à son usage prévu.

This document belongs to WABCO and should not be used, reproduced, modified, distributed or communicated to third parties without its authorization. This document is provided for information purposes only. Except as stated to the contrary, the information it contains does not constitute an offer by WABCO, a warranty by WABCO, or a modification of WABCO's standard terms and conditions of sale. The technical specifications, descriptions and illustrations in this document are as accurate as possible given the knowledge of the product at the time of drafting the document. They are not binding and WABCO reserves the right to change them without notice. The technical information, descriptions and illustrations in this document do not relieve the user of exercising his own judgment and verifying for himself the suitability of the product for the use he intends to make of it. WABCO cannot be held responsible for the consequences of a use of the product not in accordance with its intended use.

General Specification: JED-334-1 , Size ISO 14405 LP	
Further Technical Data:270C	
Doc. Code:035	Sheet: 1 To 18
General Tolerances: JED-261	

Class 1)	Range of Nominal Dimensions (in mm) ≤ 50	> 50 ≤ 180	> 180 ≤ 400	> 400	
Fine	0.5	1.0	1.5	2.0	±3°
Medium	1.0	2.0	3.0	4.0	
Coarse	2.0	3.5	5.0	6.5	

Tapped Holes acc.
1) Tolerance Class Applied Crossmarked

Copyright WABCO®

Date	Signature
2018-08-29	Sudhagar (Prepared)
2018-09-04	Sahul (Checked)
	Murugan (Expert)

WABCO

DRYING AND DISTRIBUTION UNIT

Mass	Scale	Material No.	Date of first issue: 2018-09-04
7.5 kg	1:1	432 470 055 0	Doc.Code 005, Language EN, Sheet 1/1
Size A 0	CAD System CREO	ECN-No. - , Revision - , Techn. Resp. 5057.WIN	Replacement for -