PART CODE	MATERIAL	SURFACE PROTECTION
I	ALUMINIUM ALLOY	CHROMATED
II	STEEL	PASSIVATED
III	STEEL	VARNISH
IV	BRASS	SILVER COATED
V	STEEL	PHOSPHATED

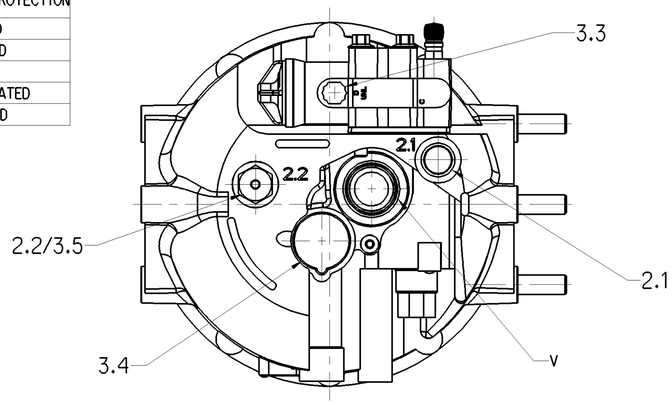

VIEW IN DIRECTION OF ARROW B

<CI> CUSTOMER INTERFACE 0

PORT ANSCHLUSS ORIFICE ORIFIZIO	FUNCTION FUNCTION FONCTION FUNZIONE	THREAD GEWINDE FILETAGE FILETTAURA	TORQUE FOR CONNECTIONS: ANZUGSMOMENT FUER EINSCHRAUBSTUTZEN: COUPLE DE SEPRAGE DES RACCORDS: COPPIA DI SERRAGGIO DEI RACCORDI:
1	SUPPLY ENERGIEZUFLUSS ALIMENTATION ALIMENTATZIONE	1/2"-14 NPTF	MAX 50 Nm
21	DELIVERY ENERGIEABFLUSS UTILISATION MANDATA	1/2"-14 NPTF	MAX 50 Nm
2.2/3.5	DRAIN VALVE ETWESSERUNGSVENTIL VALVE DE PURGE VALVOLA DI SPURGO	1/2"-14 NPTF	MAX 50 Nm
3.1;3.2 3.3;3.4	EXHAUST FOR COMPRESSED AIR ENTLEUFTUNG FUER DRUCKLUFT ECHAPPEMENT POUR AIR COMPRIME SCARIO PER ARIA COMPRESSA	–	–
4	CONTROL PORT TO THE COMPRESSOR STEUERANSCHLUSS ZUM KOMPRESSOR ORIFICE DE COMMANDE AU COMPRESSEUR ORIFIZIO DI COMANDO AL COMPRESSORE	1/4"-18 NPTF	MAX 30 Nm
6	ELECTRICAL CONTROL: ELEKTRISCHER STEUERANSCHLUSS: 280 METRI-PACK COMMANDE ELECTRIQUE: NR. 1202 0599 COMANDO ELETTRICO:	–	–

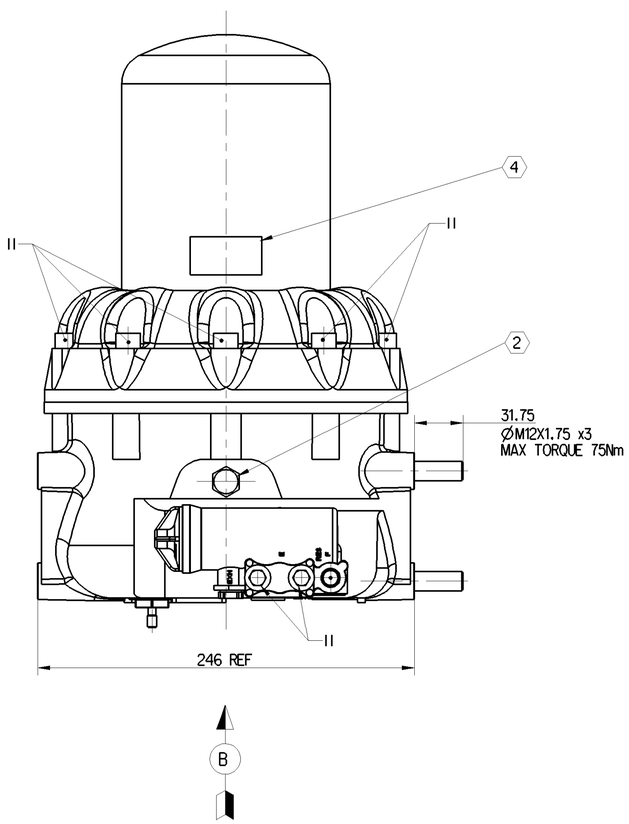

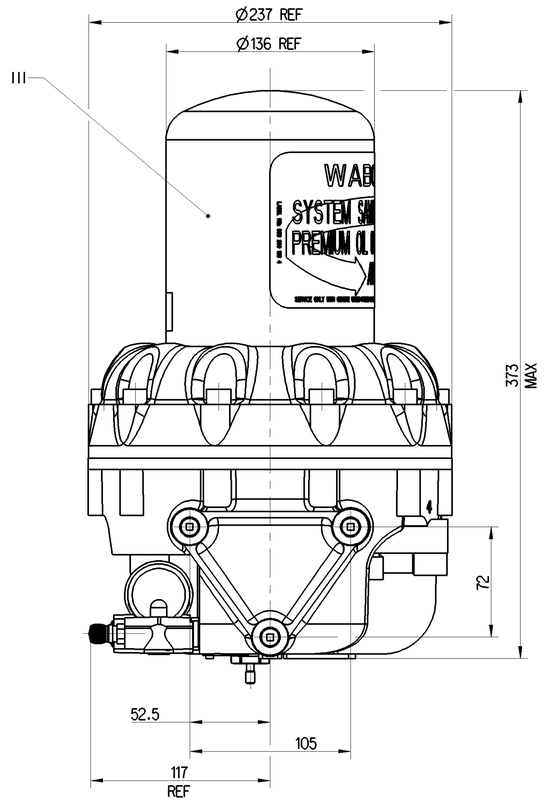

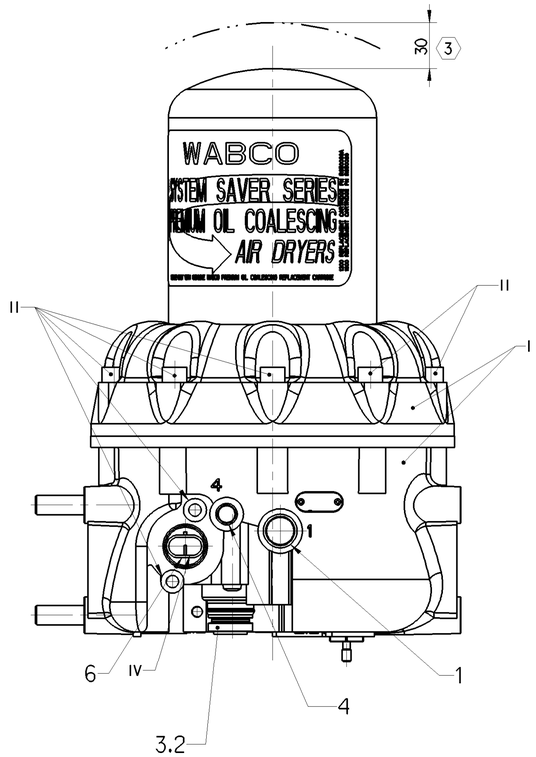

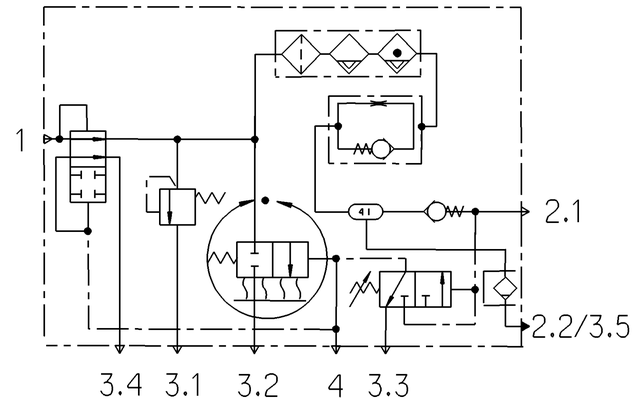

NOTES:

1. THE COMPRESSOR GOVERNOR CUT OUT PRESSURE SHALL COMPLY WITH PETERBILT SPEC MS 00800.006.
2. SAFETY VALVE: 3.1
   OPENING PRESSURE: 185 ±15 psi (12.8 ±1 bar).
3. MOUNTING HEIGHT.
4. LABEL INCLUDES THE FOLLOWING INFORMATION: PART NAME, PART NUMBER, DATE OF PRODUCTION AND BAR CODE.

THIRD ANGLE PROJECTION

TECHNICAL DATA: / TECHNISCHE DATEN: / CARACTERISTIQUES TECHNIQUES: / CARATTERISTICHE TECNICHE:

THERMAL RANGE OF APLICATION:
TERMISCHER ANWENDUNGSBEREICH: -40°. . . +176°F
GAMME D'APPLICATION THERMIQUE: (-40°. . . +80°C)
CAMPO DI APPLICAZIONE TERMICA:

MEDIUM: COMPRESSED AIR
MEDIUM: DRUCKLUFT
FLUIDE: AIR COMPRIME
FLUIDO: ARIA COMPRESSA

WORKING PRESSURE:
BETRIEBSDRUCK:
PRESSION DE SERVICE: 145 psi Max
PRESSIONE D'ESERCIZIO: (10 bar)

CUT OUT PRESSURE
ABSCHALTDRUCK 125-135 psi
PRESSION DE DECL (8.65-9.35 bar)
PRESSIONE D'APERT

CUT IN PRESSURE
EINSCHALTDRUCK 100-120 psi
PRESSION D'ENCLENCHEMENT (6.90-8.30 bar)
PRESSIONE DI INNESTO

HEATING:
HEIZUNG:
CHAUFFAGE:
RISCALDAMENTO:

CUT-IN TEMPERATURE
EINSCHALT TEMPERATUR 45° ± 10°F
TEMPERATURE DE FERMETURE (7° ± 6°C)
TEMPERATURA DI CHIUSURA

CUT-OFF TEMPERATURE
AUSSCHALT-TEMPERATUR 85° ± 5°F
TEMPERATURE DE MISE (29.5° ± 3°C)
TEMPERATURA DI APERTURA

BATTERY VOLTAGE:
BATTERIESPANNUNG: $12^{+2.4}_{-1.2}$ V DC
TENSION DE BATTERIE:
TENSIONE DE BATTERIA:

POWER:
LEISTUNG: 100 W WITHOUT CURRENT / STROMLOS / SANS COURANT / SENZA CORRENTE
PUISSANCE:
POTENZA:

95^{0}_{-5} W APPLIED ACROSS THE HEATER CONTACTS / DIREKT AN DEN HEIZUNGSKONTAKTEN / APPLIQUEE SUR LES CONTACTS DE CHAUFFAGE / APPLICATA SULLE CONTATTI DI RISCALDAMENTO

General Specification: ISO 8015, JED-334-1, Size ISO 14405 LP					
Further Technical Data: Product Specification					
Doc. Code: 035		Sheet: 1	To 10		
General Tolerances JED-261					
Class 1)	Range of nominal dimensions in mm ≤ 50	> 50 ≤ 180	> 180 ≤ 400	> 400	
Fine	±0.5	±1	±1.5	±2	
Medium X	±1	±2	±3	±4	±3°
Coarse	±2	±3.5	±5	±6.5	
Tapped Holes acc.					
1) Tolerance Class Applied Crossmarked					

Copyright ZF®

Date	Signature
Drawn 2023-08-04	Blazejzk
Checked 2023-08-08	Kolkowski
Dimensions in mm	

AIR DRYER

Mass	Scale	Material No.	Date of first issue: 2023-08-08		
9.8 kg	1:2	432 470 454 0	Doc.Code 005	Language ML	Sheet 1/1
Size A 1	CAD System CREO	ECN-No. -	Revision -	Techn. Resp. 5057_AM	Replacement for -

100mm

Toute Communication ou reproduction de ce document, toute exploitation ou communication de son contenu sont interdites, sauf autorisation écrite. Tous droits de propriété industrielle réservés, notamment en matière de brevets et de modèles.
Weitergabe sowie Vervielfältigung dieser Unterlage, Verwertung und Mitteilung ihres Inhalts nicht gestattet, soweit nicht ausdrücklich zugesichert. Gewerbliche Schutzrechte vorbehalten, insbesondere Patent- und Gebrauchsmustereintragung vorbehalten.
Non è permesso consegnare a terzi o riprodurre questo documento, né utilizzare il contenuto o renderlo comunque noto a terzi senza autorizzazione scritta. Si riservano i diritti di proprietà industriale, in particolare quelli di brevetto o registrazione di modelli.
Copying of this document and giving it to others and the use or communication of the contents thereof, are forbidden without express authority. Offenders are liable to the payment of damages. All rights are reserved in the event of the grant of a patent or registration of a utility model or design. This document is the subject of copyright.