PART CODE	MATERIAL	SURFACE PROTECTION
I	ALUMINIUM ALLOY	CHROMATED
II	STEEL	PASSIVATED
III	STEEL	VARNISH
IV	BRASS	SILVER COATED
V	STEEL	PHOSPHATED

<I> CUSTOMER INTERFACE 0

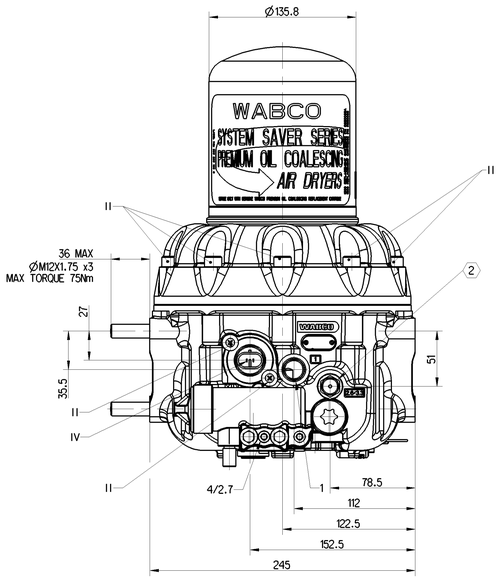

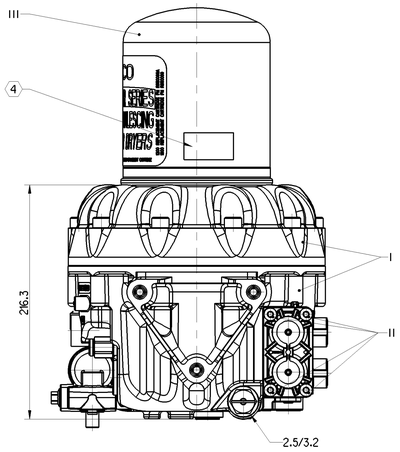

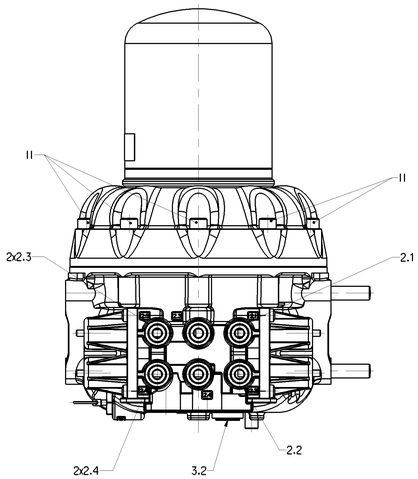

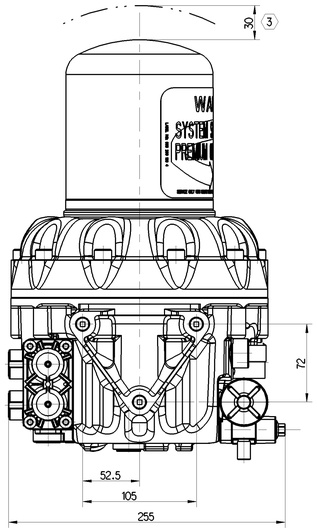

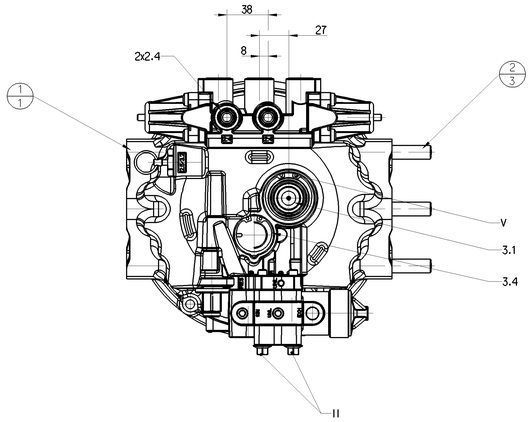

PORTS ORIFICES	ANSHLUESSE ATTACCHI	2.1	2.2	2 x 2.3	4 x 2.4
OPENING PRESSURE DYNAMIC OEFFNUNGSDRUCK DYNAMISCH PRESSION DE OUVERTURE DYNAM PRESSIONE DI APERTURA DINAM	PSI (BAR)	100.0-105.9 (6.9-7.3)	108.8-114.6 (7.5-7.9)	108.8-114.6 (7.5-7.9)	108.8-114.6 (7.5-7.9)
CLOSING PRESSURE STATIC SCHLIESSDRUCK STATISCHE PRESSION DE FERMETURE STATIQUE PRESSIONE DI CHIUSURA STATICO	PSI (BAR)	≧ 72 ≧(5)			

PORT ANSCHLUSS ORIFICE ORIFIZIO	FUNCTION FUNCTION FONCTION FUNZIONE	THREAD GEWINDE FILETAGE FILETTAURA	TORQUE FOR CONNECTIONS: ANZUGSMOMENT FUER EINSCHRAUBSTUTZEN: COUPLE DE SEPRAGE DES RACCORDS: COPPIA DI SERRAGGIO DEI RACCORDI:
1	SUPPLY ENERGIEZUFLUSS ALIMENTATION ALIMENTATZIONE	1/2"-14 NPTF	MAX. 50 Nm
2.1	SERVICE BRAKE BETRIEBSBREMSE FREINAGE FRENATURA	3/8"-18 NPTF	MAX. 30 Nm
2.2	SERVICE BRAKE BETRIEBSBREMSE FREINAGE FRENATURA	3/8"-18 NPTF	MAX. 30 Nm
2 x 2.3	TRAILER BRAKING SYSTEM ANHAENGER BREMSANLAGE SYSTEME DE FREINAGE DE LA REMORQUE FRENATURA DEL RIMORCHIO	3/8"-18 NPTF	MAX. 30 Nm
4 x 2.4	AUXILIARY DEVICE NEBENVERBRAUCHER SERVITUDES SERVIZI AUSILIARI	3/8"-18 NPTF	MAX. 30 Nm
2.5/3.2	DRAIN VALVE ENTWAESSERVNGSVENTIL VALVE DE PURGE VALVOLA DI SPURGO	1/2"-14 NPTF	MAX. 50 Nm
2.6/3.3	SAFETY VALVE SICHERHEITSVENTIL SOUPAPE DE SECURITE VALVOLA DI SICUREZZA	3/8"-18 NPTF	MAX. 30 Nm
3.1; 3.4; 3.5	EXHAUST FOR COMPRESSED AIR ENTLUEFTUNG FUER DRUCKLUFT ECHAPPEMENT POUR AIR COMPRIME SCARICO PER AIRIA COMPRESSA	–	–
4/2.7	CONTROL PORT STEVERANSCHLUSS ORFICE DE COMMANDE ORIFIZIO DI COMANDO	1/8"-27 NPTF	MAX. 25 Nm
6	HEATING HEIZUNG CHAUFFAGE RISCALDAMENTO	–	–

ITEM	DESCRIPTION	QTY
2	STUDS M12X1.75	3
1	AIR DRYER	1

NOTE:
1. THE COMPRESSOR GOVERNOR CUT OUT PRESSURE SHALL COMPLY WITH PETERBILT SPEC MS-0800-006.
2. SAFETY VALVE 2.6/3.3
   OPENING PRESSURE: 185 ±15 psi (12.8 ±1 bar)
3. MOUNTING HEIGHT
4. LABEL INCLUDES THE FOLLOWING INFORMATION: PART NAME, PART NUMBER, DATE OF PRODUCTION AND BAR CODE

THIRD ANGLE PROJECTION

TECHNICAL DATA: / TECHNISCHE DATEN: / CARACTERISTIQUES TECHNIQUES: / CARATTERISTICHE TECNICHE:

THERMAL RANGE OF APLICATION:
TERMISCHER ANWENDUNGSBEREICH:
GAMME D'APPLICATION THERMIQUE:
CAMPO DI APPLICAZIONE TERMICA:
Continuous application:
-40°. . . +149°F
(-40°. . . +65°C)
max 10% of vehicle run-time up to +80°C
(reduced drying performance)

MEDIUM: COMPRESSED AIR
MEDIUM: DRUCKLUFT
FLUIDE: AIR COMPRIME
FLUIDO: ARIA COMPRESSA

WORKING PRESSURE:
BETRIEBSDRUCK: 145 psi Max
PRESSION DE SERVICE: (10 bar)
PRESSIONE D'ESERCIZIO:

SAFETY VALVE OPENING PRESSURE:
SICHERHEITSVENTIL OEFFNUNGSDRUCK: 185 ±15 psi
SOUPAPE DE SECURITE PRESSION D'OUVERTURE: (12.8 ±1 bar)
VALVOLA DI SICUREZZA PRESSIONE D'APERTURA:

CUT OUT PRESSURE
ABSCHALTDRUCK 125-135 psi
PRESSION DE DECL (8.61-9.30 bar)
PRESSIONE D'APERT

CUT IN PRESSURE
EINSCHALTDRUCK 100-120 psi
PRESSION D'ENCLENCHEMENT (6.89-8.27 bar)
PRESSIONE DI INNESTO

HEATING:
HEIZUNG:
CHAUFFAGE:
RISCALDAMENTO:

CUT-IN TEMPERATURE
EINSCHALT TEMPERATUR 45° ± 10°F
TEMPERATURE DE FERMETURE (7° ± 6°C)
TEMPERATURA DI CHIUSURA

CUT-OFF TEMPERATURE
AUSSCHALT-TEMPERATUR 85° ± 5°F
TEMPERATURE DE MISE (29.5° ± 3°C)
TEMPERATURA DI APERTURA

BATTERY VOLTAGE:
BATTERIESPANNUNG: 12 +4.5 -4 V DC
TENSION DE BATTERIE:
TENSIONE DE BATTERIA:

POWER:
LEISTUNG: 100 W WITHOUT CURRENT
PUISSANCE: STROMLOS
POTENZA: SANS COURANT
SENZA CORRENTE
95 +3 -3 W
APPLIED ACROSS THE HEATER CONTACTS
DIREKT AN DEN HEIZUNGSKONTAKTEN
APPLIQUEE SUR LES CONTACTS DE CHAUFFAGE
APPLICATA SULLE CONTATTI DI RISCALDAMENTO

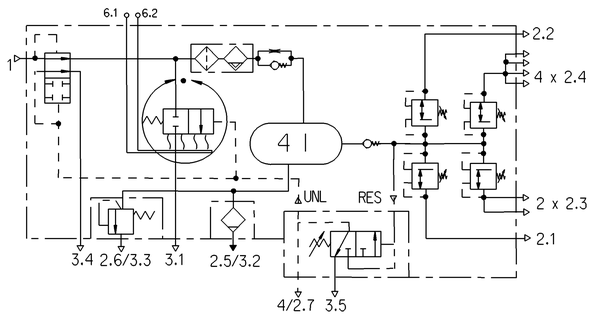

General Specification: ISO 8015, JED-334-1, Size ISO 14405 LP		Copyright ZF®	
Further Technical Data: Product Specification		Date / Signature	
Doc. Code: 0355	Sheet: 1 To 13	Drawn: 2023-08-01 Bkozejak	AIR DRYER WITH PURGE TANK
General Tolerances JED-261		Checked: 2023-08-01 Kolkowski	
Range of nominal dimensions in mm		Dimensions in mm	
Class 1)	> 0 ≤ 50 / > 50 ≤ 180 / > 180 ≤ 400 / > 400	Mass: 10.5 kg	Scale: 1:2
Fine	±0.5 / ±1 / ±1.5 / ±2	Material No.: 432 475 301 0	Date of first issue: 2023-08-01
Medium X	±1 / ±2 / ±3 / ±4 / ±3°	Size: A 0	CAD System: CREO
Coarse	±2 / ±3.5 / ±5 / ±6.5	EDB No.: •	Revision: •
Tapped Holes acc.		Techn. Stat.: 5057_AM	Doc. Code: 005
1) Tolerance Class Applied Crossmarked		Replacement for: •	Language: ML
			Sheet: 1/2

Tale documento è proprietà esclusiva di ZF Friedrichshafen AG. Tale proprietà è riconosciuta da tutti coloro che ne entrano in possesso, sia all'interno, sia all'esterno, anche se non esplicitamente indicata. Ogni ulteriore utilizzo di questo dato è consentito solo con autorizzazione scritta da parte di ZF Friedrichshafen AG.
Dieses Dokument ist das Eigentum der ZF Friedrichshafen AG. Dieses Eigentum wird von allen, die es in Besitz nehmen, sowohl innerhalb wie außerhalb des Unternehmens, auch ohne ausdrückliche Angabe, anerkannt. Jede weitere Verwendung dieser Daten ist nur mit schriftlicher Genehmigung der ZF Friedrichshafen AG zulässig.
This document is the property of ZF Friedrichshafen AG. This property is recognized by all persons who have it in their possession, both within and outside the company, even if not explicitly stated. Any further use of this data is only permitted with written consent from ZF Friedrichshafen AG.

Tale Dokumentów są własnością ZF. Są dostępne tylko wszystkim, na których zostały nałożone, jak i dla wszystkich osób, na których zostały nałożone, jak i dla wszystkich osób, na których zostały nałożone, jak i dla wszystkich osób