SURFACE PROTECTION OBERFLAECHENSCHUTZ PROTECTION DE SURFACE PROTEZIONE SUPERFICIALE		
I	ALUMINIUM ALLOY	CHROMATED
II	STEEL	PASSIVATED
III	STEEL	VARNISHED
IV	BRASS	SILVER COATED
V	STEEL	PAINTED
VI	STEEL	PASSIVATED

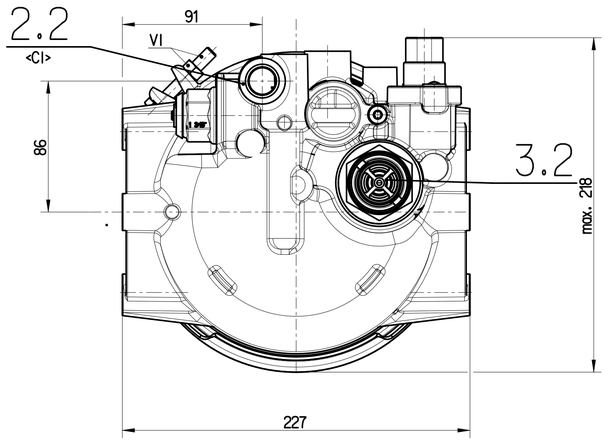

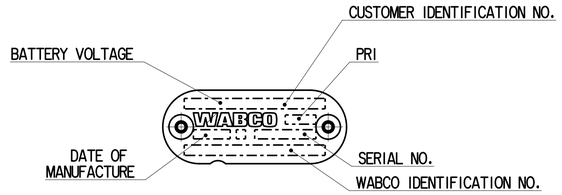

PORT ANSCHLUSS ORIFICE ORIFIZIO	FUNCTION FUNCTION FONCTION FUNZIONE	THREAD GEWINDE FILETAGE FILETTATURA	TORQUE FOR CONNECTIONS: ANZUGSMOMENT FUER EINSCHRAUBSTUTZEN: COUPLE DE SERRAGE DES RACCORDS: COPPIA DI SERRAGGIO DEI RACCORDI:
1	SUPPLY ENERGIEZUFLUSS ALIMENTATION ALIMENTAZIONE	1/2"-14 NPTF	MAX. 50 Nm
2.1;2.2	DELIVERY ENERGIEABFLUSS UTILISATION MANDATA	1/2"-14 NPTF	MAX. 50 Nm
3.1;3.2 3.3	EXHAUST FOR COMPRESSED AIR ENTLUFTUNG FUER DRUCKLUFT ECHAPPEMENT POUR AIR COMPRIME SCARICO PER ARIA COMPRESSA	–	–
4	CONTROL PORT TO THE COMPRESSOR STEUERANSCHLUSS ZUM KOMPRESSOR ORIFICE DE COMMANDE AU COMPRESSEUR ORIFIZIO DI COMANDO AL COMPRESSORE	1/4"-18 NPTF	MAX. 30 Nm
6	ELECTRICAL CONTROL: ELEKTRISCHER STEUERANSCHLUSS: 280 METRI-PACK COMMANDE ELECTRIQUE: NR. 1202 0599 COMANDO ELETTRICO:	–	–

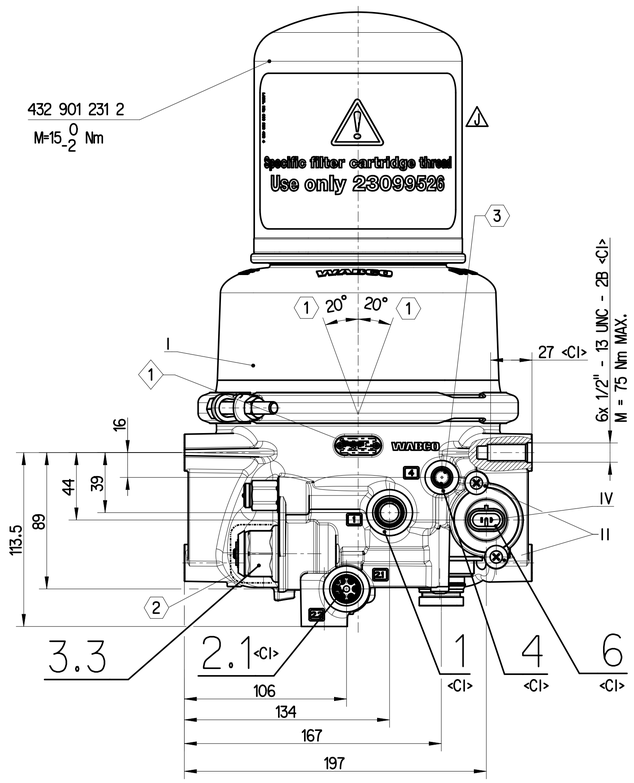

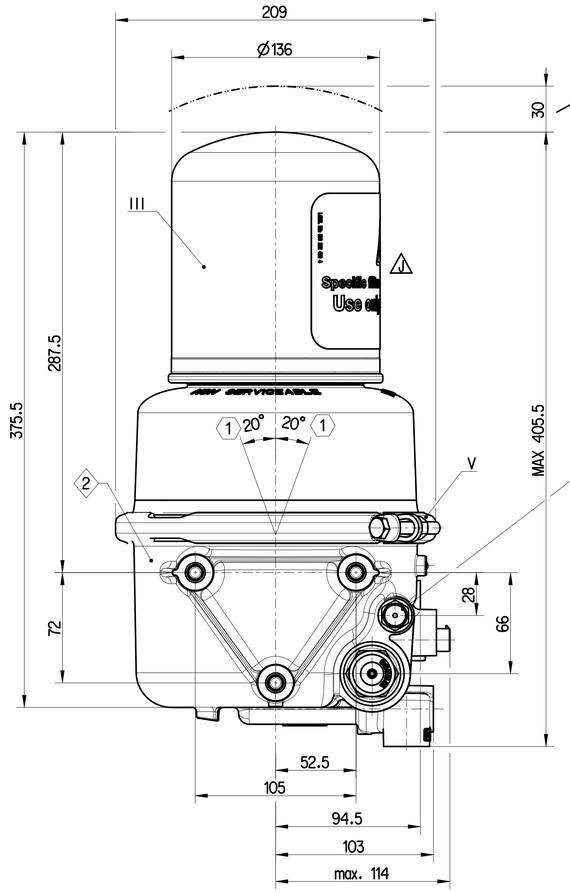

SAFETY VALVE
SICHERHEITSVENTIL
SOUPAPE DE SECURITE
VALVOLA DI SICUREZZA 3.1

OPENING PRESSURE:
OEFFNUNGSDRUCK: 185 ± 15 psi
PRESSION D'OUVERTURE: (12.8 ± 1 bar)
PRESSIONE D'APERTURA:

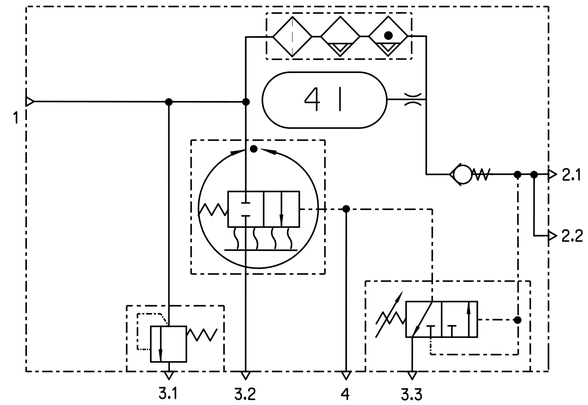

(1) INSTALLATION POSITION AS DRAWN
EINBAULAGE WIE GEZEICHNET
POSITION D'INSTALLATION SUIVANT DESSIN
POSIZIONE DI MONTAGGIO COME DISEGNATO

(2) COVER WHEN PAINTING ON THE VEHICLE
REMOVE COVER AFTER PAINTING

<2> (3) COMPRESSOR CONTROL SIGNAL [SC]

(1) MARKED ACCORDING STD 5051,16

(2) MARKED ACCORDING STD 103-0010
MARKED INSIDE THE PARTS (HIDDEN FROM OUTSIDE)

SPECIAL CHARACTERISTICS STD 105-0007

<1> SAFETY CHARACTERISTICS	0
<2> SIGNIFICANT CHARACTERISTICS	3
<CI> CUSTOMER INTERFACE	7

TECHNICAL DATA: / TECHNISCHE DATEN: / CARACTERISTIQUES TECHNIQUES: / CARATTERISTICHE TECNICHE:

THERMAL RANGE OF APPLICATION:
TERMISCHER ANWENDUNGSBEREICH: -40°. . . +176°F
GAMME D'APPLICATION THERMIQUE: (-40°. . . +80°C)
CAMPO DI APPLICAZIONE TERMICA:

MEDIUM: COMPRESSED AIR
MEDIUM: DRUCKLUFT
FLUIDE: AIR COMPRIME
FLUIDO: ARIA COMPRESSA

WORKING PRESSURE:
BETRIEBSDRUCK: 145 psi Max
PRESSION DE SERVICE: (10 bar)
PRESSIONE D'ESERCIZIO:

CUT OUT PRESSURE
ABSCHALTDRUCK <2> 132 ±3 psi [SC]
PRESSION DE DECL (9.1 ±0.2 bar)
PRESSIONE D'APERT

OPERATING RANGE
ARBEITSBEREICH <2> 22 ±7 psi [SC]
GAMME DE FONCTIONNEMENT (1.5 ±0.5 bar)
GAMMA DI FUNZIONAMENTO

HEATING:
HEIZUNG:
CHAUFFAGE:
RISCALDAMENTO:

CUT-IN TEMPERATURE
EINSCHALT TEMPERATUR 45° ± 10°F
TEMPERATURE DE FERMETURE (7° ± 6°C)
TEMPERATURA DI CHIUSURA

CUT-OFF TEMPERATURE
AUSSCHALT-TEMPERATUR 85° ± 5°F
TEMPERATURE DE MISE (29.5° ± 3°C)
TEMPERATURA DI APERTURA

BATTERY VOLTAGE:
BATTERIESPANNUNG: $12^{+2.4}_{-1.2}$ V DC
TENSION DE BATTERIE:
TENSIONE DE BATTERIA:

NOMINAL POWER:
NENNLEISTUNG: 100 W
PUISSANCE NOMINALE:
POTENZA NOMINALE:

POWER WITH 12V DC:
LEISTUNG BEI 12V DC: 95^{0}_{-5} W
PUISSANCE AVEC 12V DC:
POTENZA CON 12V DC:

General Specification: ISO 8015, JED-334-1, Size ISO 14405 LP
Further Technical Data: Product Specification
Doc. Code: 035 Sheet: 1 To 6
General Tolerances JED-261

Class 1)	≤ 50	> 50 ≤ 180	> 180 ≤ 400	> 400	∢
Fine	±0.5	±1	±1.5	±2	±3°
Medium X	±1	±2	±3	±4	
Coarse	±2	±3.5	±5	±6.5	

Tapped Holes acc.
1) Tolerance Class Applied Crossmarked

Copyright ZF®

Date	Signature
Drawn 2024-11-27	Kurzynski
Checked 2024-12-11	Puto-Jarczak

238 x 227 x 405
Dimensions in mm

AIR DRYER WITH PURGE TANK
LUFTTROCKNER MIT REINIGUNGSTANK
DESSICATEUR AVEC RESERVOIR DE NETTOYAGE
ESSICCATORE D'ARIA CON SERBATOIO DI DEPURAZIONE

Mass	Scale	Material No.	Date of first issue: 2016-08-05
6.365 kg	1:2	432 480 001 0	Doc.Code 005 / Language ML / Sheet 1/1
Size A 1	CAD System CREO	ECN-No. 518222 / Revision 2 x J / Techn. Resp. 5057	Replacement for

100mm

Toute Communication ou reproduction de ce document, toute exploitation ou communication de son contenu sont interdites, sauf autorisation expresse. Tous droits de propriété industrielle réservés, notamment en matière de brevets et de modèles.

Weitergabe sowie Vervielfältigung dieser Unterlage, Verwertung und Mitteilung ihres Inhalts nicht gestattet, soweit nicht ausdrücklich zugelassen. Alle Rechte für den Fall der Patenterteilung oder Eintragung von Gebrauchsmuster vorbehalten.

Non è permesso consegnare o fare o riprodurre questo documento, né utilizzare il contenuto o renderlo comunque noto a terzi senza esplicita autorizzazione. Tutti i diritti di proprietà industriale, anche per quanto attiene ai modelli, sono riservati.

Copying of this document and giving it to others and the use or communication of the contents thereof, are forbidden without express authority. Offenders liable for the payment of damages. All rights are reserved in the event of the grant of patent or registration of a utility model or design. This document is the subject of copyright.