PART CODE	MATERIAL	SURFACE PROTECTION
I	STEEL	HOT DIP METAL COATING
II	STEEL	COATING ZN OR ZN/FE
III	STEEL	VARNISH

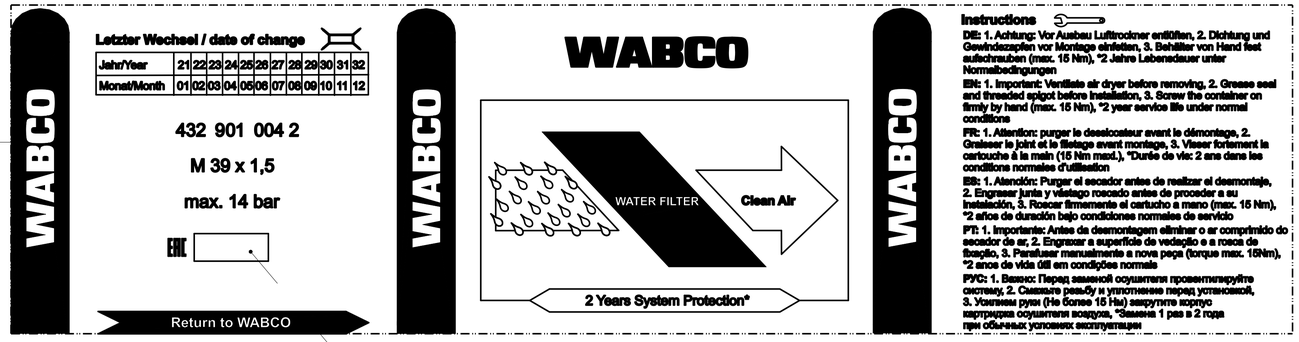

DATE OF MANUFACTURE YEAR MONTH

LABELLING 400 x 105mm

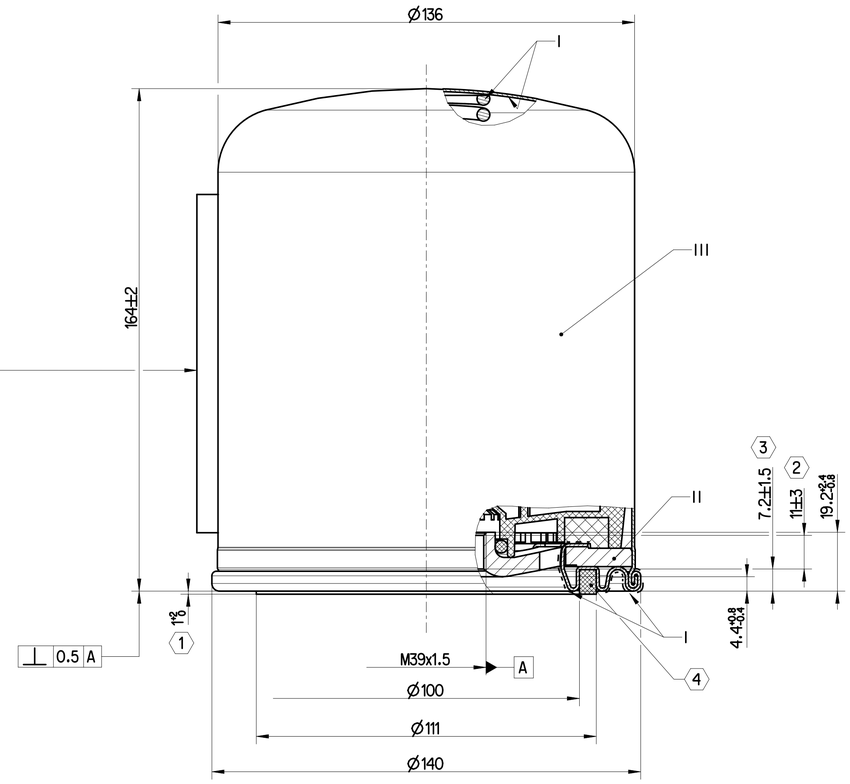

THERMAL RANGE OF APPLICATION: -40°C ... +80°C

WORKING PRESSURE: $P_e$max. = 14bar

4 SEALING RING (OUTSIDE): NBR 70±5 SHORE A

O-RING: NBR 70±5 SHORE A

PERMISSIBLE LEAKAGE: MAX. 6cm³/min AT 10bar TEST PRESSURE

TEXT: RAL 9010 WHITE

BACKGROUD COLOR: RAL 9005 BLACK

1 DIMENSION APPLY IF THE SEAL IS IN CONTACT WITH THE GROOVE BOTTOM

2 MEASURED FROM TOP TO BOTTOM FULL THREAD TURN BY CONTOUR GRAPH

3 MEASURED FROM BOTTOM FULL THREAD TURN TO FIRST RING RADIUS BY CONTOUR GRAPH

Toute Communication ou reproduction de ce document, toute exploitation ou communication de son contenu sont interdites, sauf autorisation écrite. Tous droits de propriété industrielle réservés, notamment en matière de brevets et de modèles.

Non è permesso consegnare a terzi o rendere questo documento, né utilizzare il contenuto o renderlo comunque noto a terzi senza previo consenso scritto. Tutti i diritti di proprietà industriale sono riservati, in particolare quelli di brevetto o registrazione di un modello.

Weitergabe sowie Vervielfältigung dieser Unterlage, Verwertung und Mitteilung ihres Inhalts nicht gestattet, soweit nicht ausdrücklich zugestanden. Zuwiderhandlungen verpflichten zu Schadenersatz. Alle Rechte für den Fall der Patent- oder Gebrauchsmustereintragung vorbehalten.

Copying of this document and giving it to others and the use or communication of the contents thereof, are forbidden without express authority. Offenders are liable to the payment of damages. All rights are reserved in the event of the grant of patent or registration of a utility model or design. This document is the subject of copyright.

General Specification: ISO 8015, JED-334-1, Size ISO 14405 LP			
Further Technical Data: Product Specification			
Doc. Code: O35	Sheet: 1 To 3		
General Tolerances JED-261			
Class 1)	Range of nominal dimensions in mm ≤ 50	> 50 ≤ 180	> 180 ≤ 400	> 400
Fine X	±0.5	±1	±1.5	±2
Medium	±1	±2	±3	±4
Coarse	±2	±3.5	±5	±6.5
Tapped Holes acc. -				
1) Tolerance Class Applied Crossmarked				

±3°

Copyright ZF®

Date	Signature
Drawn 2024-01-16	Kolkowski
Checked 2024-01-16	Pawlowski

Dimensions in mm

DESICCANT CARTRIDGE

Mass	Scale	Material No.	Date of first issue: 2023-02-13
2.42 kg	1:1	432 901 004 2	Doc.Code 005 / Language EN / Sheet 1/1
Size A 1	CAD System CREO	ECN-No. 516279 / Revision 1 x A / Techn. Resp. 5059_AM	Replacement for -

100mm

dim: 432901004_005 / version: 1 / stds: Approved / rpt: 432901004_005