| PART CODE | MATERIAL | SURFACE PROTECTION |
|---|---|---|
| I | STEEL | COATING ZN |
| II | STEEL | COATING ZN OR ZN/FE |
| III | STEEL | VARNISH |

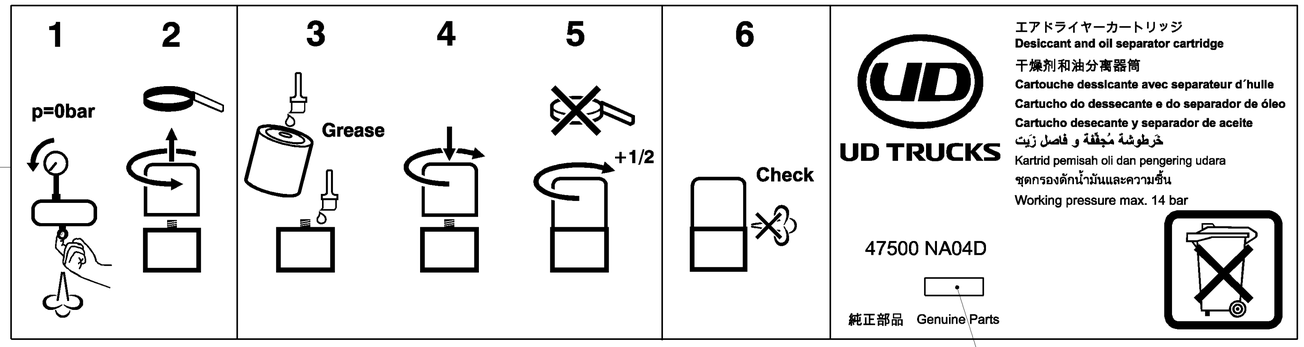


| | | |
|---|---|---|
| DATE OF MANUFACTURE | YEAR | MONTH |
| HERSTELLDATUM | JAHR | MONAT |
| DATE DE FABRICATION | ANNEE | MOIS |
| DATA DI FABBRICAZIONE | ANNO | MESE |

LABELLING
BESCHRIFTUNG
ETIQUETAGE
ETICHETTATURA
420 x 110mm

THERMAL RANGE OF APPLICATION:
THERMISCHER ANWENDUNGSBEREICH:
GAMME D'APPLICATION THERMIQUE:
CAMPO DI APPLICAZIONE TERMICA: -40°C ... +80°C

WORKING PRESSURE:
BETRIEBSDRUCK:
PRESSION DE SERVICE:
PRESSIONE D' ESERCIZIO: $P_e$max. = 14 bar

SEALING RING (OUTSIDE):
(4) DICHTRING (AUSSEN):
JOINT D'ETANCHEITE (EXTERIEUR):
ANELLO DI TENUTA (ESTERNO): NBR 70±5 SHORE A

O-RING:
O-RING :
JOINT TORIQUE
O-RING: NBR 65±5 SHORE A

PERMISSIBLE LEAKAGE: MAX. 6 $cm^3$/min AT 10 bar TEST PRESSURE
ZULAESSIGE LECKAGE: MAX. 6 $cm^3$/min BEI 10 bar PRUEFDRUCK
FUITE AMISE: MAX. 6 $cm^3$/MIN A 10 bar PRESSION D'ESSAI
FUGA AMNESSA: MAX. 6 $cm^3$/MIN AL 10 bar PRESSIONE DI PROVA

| | | |
|---|---|---|
| TEXT:<br>TEXT:<br>TEXTE:<br>TESTO: | RAL 9005 | BLACK<br>SCHWARZ<br>NOIR<br>NERO |
| BACKGROUD COLOR:<br>UNTERGRUND:<br>COULEUR DU FOND:<br>COLORE DEL FONDO: | RAL 9010 | WHITE<br>WEISS<br>BLANC<br>BLANCO |

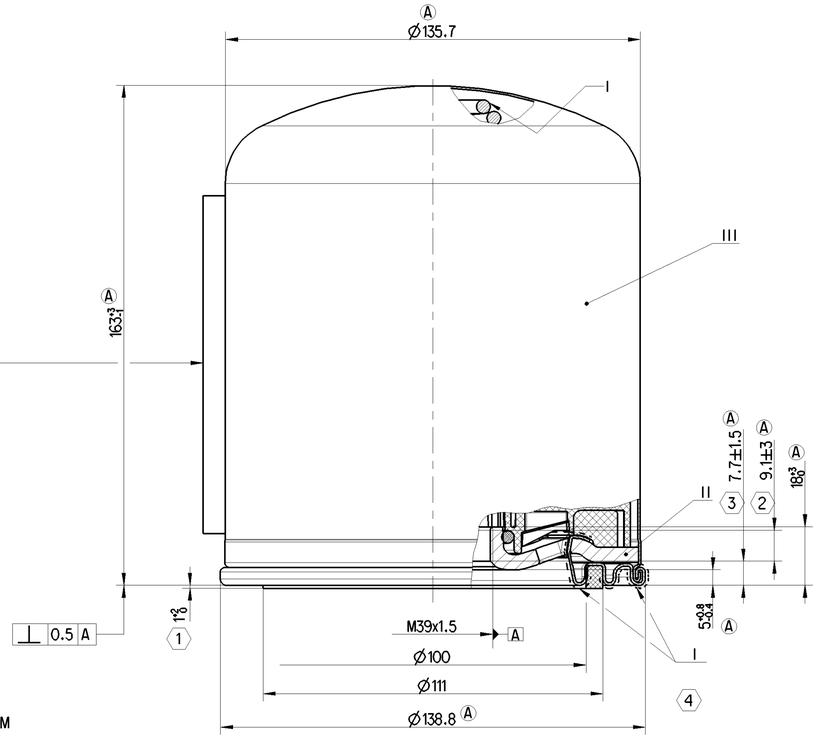


(1) DIMENSION APPLY IF THE SEAL IS IN CONTACT WITH THE GROOVE BOTTOM
MASSE GELTEN BEI ANLIEGENDER DICHTUNG AM NUTGRUND

(2) MEASURED FROM TOP TO BOTTOM FULL THREAD TURN BY CONTOUR GRAPH
GEMESSEN VOM OBEREN BIS UNTEREN VOLLEN GEWINDEGANG MIT KONTURGRAPH

(3) MEASURED FROM BOTTOM FULL THREAD TURN TO FIRST RING RADIUS BY CONTOUR GRAPH
GEMESSEN VOM UNTEREN VOLLEN GEWINDEGANG BIS ERSTEN RINGRADIUS MIT KONTURGRAPH

| | | | | | | |
|---|---|---|---|---|---|---|
| General Specification: JED-334-1 , Size ISO 14405 LP | | | | | | |
| Further Technical Data: Product Specification | | | | | | |
| Doc. Code: 035 | | | Sheet: 1 To 3 | | | |
| General Tolerances JED-261 | | | | | | |
| Range of Nominal Dimensions ( ± mm) | | | | | | |
| Class 1) | | ≤ 50 | > 50 ≤ 180 | > 180 ≤ 400 | > 400 | ∢ |
| Fine | X | 0.5 | 1.0 | 1.5 | 2.0 | ±3° |
| Medium | | 1.0 | 2.0 | 3.0 | 4.0 | |
| Coarse | | 2.0 | 3.5 | 5.0 | 6.5 | |
| Tapped Holes acc. | | | | | | |
| 1) Tolerance Class Applied Crossmarked | | | | | | |

Copyright WABCO®

| Date | Signature |
|---|---|
| Drawn 2021-01-27 | Cwiokalski |
| Checked 2021-02-04 | Kosirzewa |
| Expert Kosirzewa | |

**WABCO**

DESICCANT CARTRIDGE
TROCKENMITTELBEHAELTER
CARTOUCHE DU DESSICCATEUR
CARTUCCIA PER ESSICCATIVO

| Mass | Scale | Material No. | Date of first issue | | |
|---|---|---|---|---|---|
| 2.3 KG | 1:1 | 432 901 235 2 | Doc.Code 005 | Language ML | Sheet 1/1 |
| Size A 1 | CAD System CREO | ECN-No. 506198 / Revision 8 x A / Techn. Resp. 5059 | Replacement for | | |

100mm

Toute Communication ou reproduction de ce document, toute exploitation ou communication de son contenu sont interdites, sauf autorisation écrite. Tous droits de propriété industrielle réservés, notamment en matière de brevets et de modèles.

Weitergabe sowie Vervielfältigung dieser Unterlage, Verwertung und Mitteilung ihres Inhalts nicht gestattet, soweit nicht ausdrücklich gestattet. Zuwiderhandlungen verpflichten zu Schadensersatz. Alle Rechte für den Fall der Patent-, Gebrauchsmuster- oder Geschmacksmustereintragung vorbehalten.

Non è permesso consegnare a terzi o riprodurre questo documento, né utilizzare il contenuto o renderlo comunque noto a terzi senza autorizzazione scritta. Ogni violazione obbliga al risarcimento dei danni. Si riserva il diritto di depositare brevetti o modelli.

Copying of this document and giving it to others and the use or communication of the contents thereof, are forbidden without express authority. Offenders are liable to the payment of damages. All rights are reserved in the event of the grant of patent or registration of a utility model or design. This document is the subject of copyright.