PART CODE	MATERIAL	SURFACE PROTECTION
I	STEEL	COATING ZN
II	STEEL	COATING ZN OR ZN/FE
III	STEEL	VARNISH

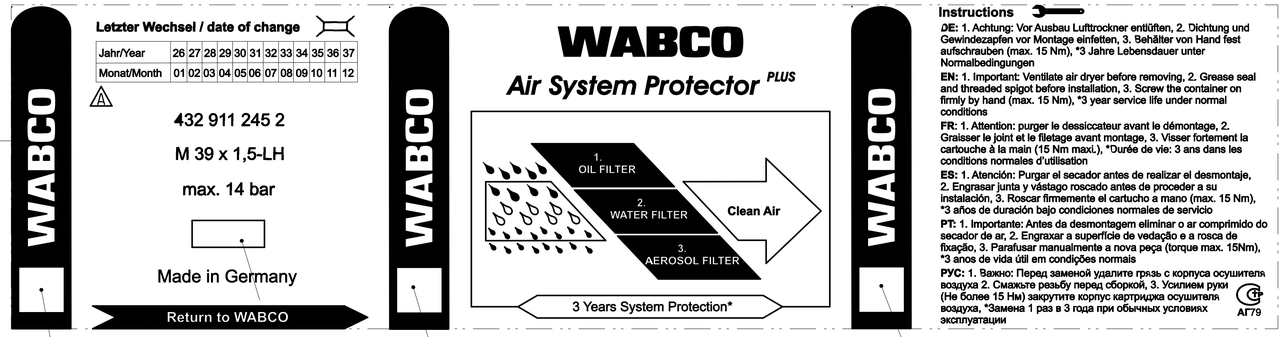

DATE OF MANUFACTURE
HERSTELLDATUM (YYMM)
DATE DE FABRICATION
DATA DI FABBRICAZIONE

DATAMATRIX CODE 5

LABELLING 400 x 105mm
BESCHRIFTUNG
ETIQUETAGE
ETICHETTATURA

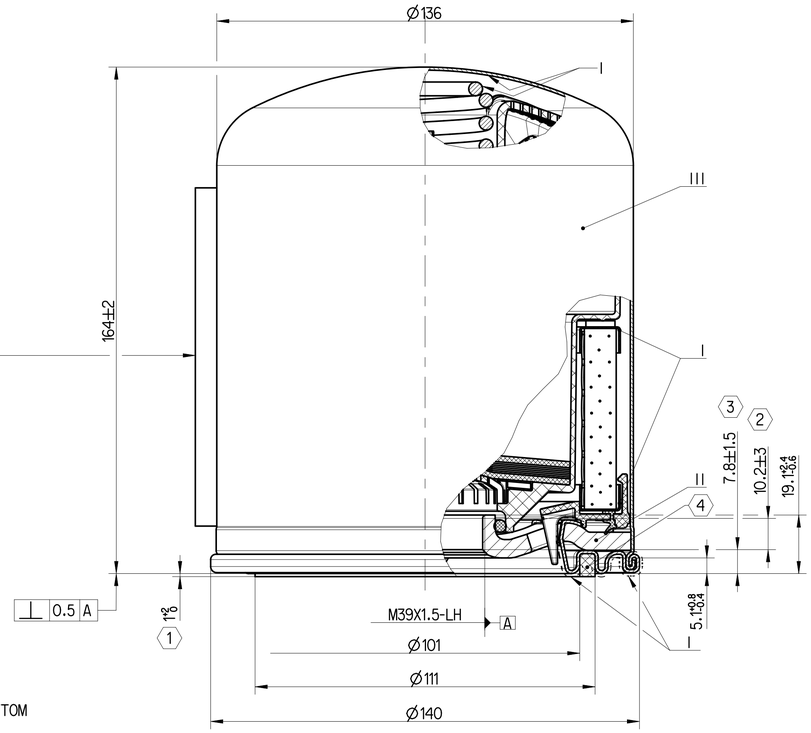

THERMAL RANGE OF APPLICATION:
THERMISCHER ANWENDUNGSBEREICH: -40°C ... +80°C
GAMME D'APPLICATION THERMIQUE:
CAMPO DI APPLICAZIONE TERMICA:

WORKING PRESSURE:
BETRIEBSDRUCK: $P_e$max. = 14 bar
PRESSION DE SERVICE:
PRESSIONE D' ESERCIZIO:

4 SEALING RING (OUTSIDE):
DICHTRING (AUSSEN): NBR 70±5 SHORE A
JOINT D'ETANCHEITE (EXTERIEUR):
ANELLO DI TENUTA (ESTERNO):

O-RING:
O-RING : NBR 65±5 SHORE A
JOINT TORQUE
O-RING:

PERMISSIBLE LEAKAGE: MAX. 6 cm^3/min AT 10 bar TEST PRESSURE
ZULAESSIGE LECKAGE: MAX. 6 cm^3/min BEI 10 bar PRUEFDRUCK
FUITE AMISE: MAX. 6 cm^3/MIN A 10 bar PRESSION D'ESSAI
FUGA AMNESSA: MAX. 6 cm^3/MIN AL 10 bar PRESSIONE DI PROVA

TEXT: BLUE
TEXT: PANTONE 293 BLAU
TEXTE: BLEU
TESTO: BLU

BACKGROUD COLOR: PEARL GOLD
UNTERGRUND: RAL 1036 PERLGOLD
COULEUR DU FOND: OR NACRE
COLORE DEL FONDO: ORO PERLATO

5 ACCORDING TO LABELING INFORMATION FOR MARKING (DOC.922)

1 DIMENSION APPLY IF THE SEAL IS IN CONTACT WITH THE GROOVE BOTTOM
MASSE GELTEN BEI ANLIEGENDER DICHTUNG AM NUTGRUND

2 MEASURED FROM TOP TO BOTTOM FULL THREAD TURN BY CONTOUR GRAPH
GEMESSEN VOM OBEREN BIS UNTEREN VOLLEN GEWINDEGANG MIT KONTURGRAPH

3 MEASURED FROM BOTTOM FULL THREAD TURN TO FIRST RING RADIUS BY CONTOUR GRAPH
GEMESSEN VOM UNTEREN VOLLEN GEWINDEGANG BIS ERSTEN RINGRADIUS MIT KONTURGRAPH

General Specification: ISO 8015, JED-334-1, Size ISO 14405 LP
Further Technical Data: Product Specification
Doc. Code: 035 Sheet: 1 To 3
General Tolerances JED-261

Class 1)	Range of nominal dimensions in mm ≤ 50	> 50 ≤ 180	> 180 ≤ 400	> 400	∡
Fine X	±0.5	±1	±1.5	±2	±3°
Medium	±1	±2	±3	±4	
Coarse	±2	±3.5	±5	±6.5	

Tapped Holes acc.
1) Tolerance Class Applied Crossmarked

Copyright ZF®

Date	Signature
Drawn 2026-01-21	Kurzynski
Checked 2026-02-03	Robak

Dimensions in mm

AIR SYSTEM PROTECTOR
TROCKENMITTELBEHÄLTER
CARTOUCHE DU DESSICCATEUR
CARTUCCIA PER ESSICCATIVO

Mass	Scale	Material No.			Date of first issue: 2016-04-01
2.3 kg	1:1	432 911 245 2			Doc.Code 005 / Language ML / Sheet 1/1
Size A 1	CAD System CREO	ECN-No. 520245	Revision 4 x A	Techn. Resp. 5059	Replacement for

100mm

Tutte Comunicazioni su riproduzione da ce document, tutte esploitation su comunicazione de son contenu sont interdites; sauf autorisation écrite. Tous droits de propriété industrielle réservés, notamment en matière de brevets et de modèles.
Non è permesso consegnare o farci o riprodurre questo documento, né utilizzare il contenuto o renderlo comunque noto a terzi senza autorizzazione scritta. Ci riserviamo ogni diritto di proprietà industriale, anche per quanto attiene ai brevetti e ai modelli.
Weitergabe sowie Vervielfältigung dieser Unterlage, Verwertung und Mitteilung ihres Inhalts nicht gestattet, soweit nicht ausdrücklich zugestanden. Zuwiderhandlungen verpflichten zu Schadensersatz. Alle Rechte für den Fall der Patenterteilung oder eingetragenen Gebrauchsmuster vorbehalten.
Copying of this document and giving it to others and the use or communication of the contents thereof, are forbidden without express authority. Offenders are liable to the payment of damages. All rights are reserved in the event of the grant of patent or registration of a utility model or design. The document is the subject of copyright.