PART CODE	MATERIAL	SURFACE PROTECTION
I	STEEL	HOT DIP METAL COATING
II	STEEL	PASSIVATED
III	STEEL	PAINTED

<1>	SAFETY CHARACTERISTICS	0
<2>	SIGNIFICANT CHARACTERISTICS	0
<CI>	CUSTOMER INTERFACE	0

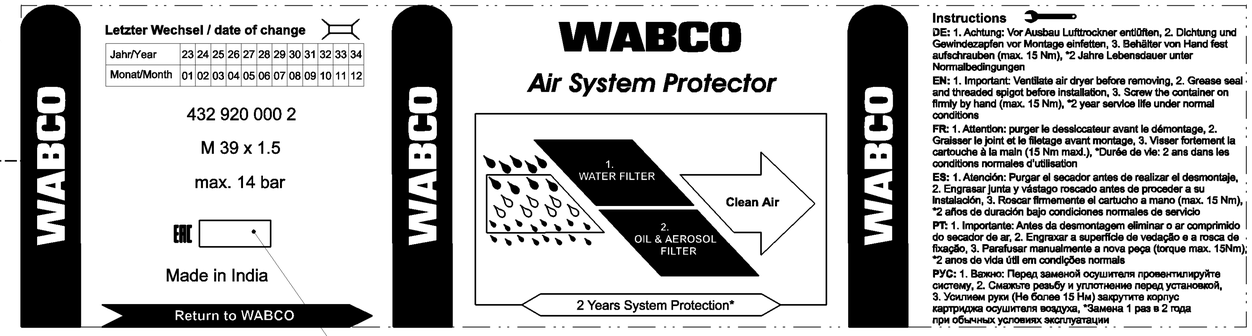

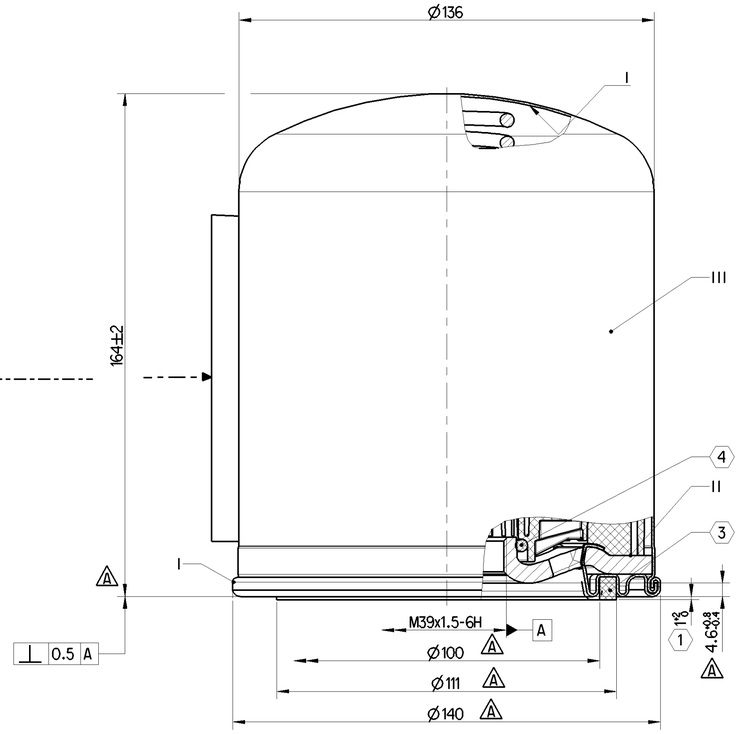

THERMAL RANGE OF APPLICATION : -40°C....80°C

WORKING PRESSURE : Pe max. = 14 bar

(3) SEALING RING (OUTSIDE) : NBR 80±5 SHORE A

(4) O-RING : NBR 70±5 SHORE A

PERMISSIBLE LEAKAGE : MAX. 6 cm³/min AT 10 bar TEST PRESSURE

BACKGROUND COLOR : RAL 9006 WHITE ALUMINIUM PAINTED

TEXT COLOR : BLUE PANTONE 293c

(1) DIMENSION APPLY IF THE SEAL IS IN CONTACT WITH THE GROOVE BOTTOM

General Specification: ISO 8015, JED-334-1, Size ISO 14405 LP							
Further Technical Data/Product Specification							
Doc. Code: 035				Sheet: 1 To 3			
General Tolerances JED-261							
Class 1)	Range of nominal dimensions in mm ≤ 50	> 50 ≤ 180	> 180 ≤ 400	> 400			
Fine	X	±0.5	±1	±1.5	±2		
Medium		±1	±2	±3	±4	±3°	
Coarse		±2	±3.5	±5	±6.5		
Tapped Holes acc.							
1) Tolerance Class Applied Crossmarked							

Copyright ZF®

Date	Signature
Drawn 2023-04-13	Sudhagar
Checked 2023-04-17	Pyla-Jarczak

140 x 140 x 165
Dimensions in mm

DESICCANT CATRIDGE

Mass	Scale	Material No.	Date of first issue: 2020-01-27		
2.36 kg	1:1	432 920 000 2	Doc.Code 005	Language EN	Sheet 1/1
Size A 1	CAD System CREO	ECN-No. 513559	Revision 9x A	Techn. Resp. 5059	Replacement for -

Toute Communication ou reproduction de ce document, toute exploitation ou communication de son contenu sont interdites, sauf autorisation écrite. Tous droits de propriété industrielle réservés, notamment en matière de brevets et de modèles.
Weitergabe sowie Vervielfältigung dieser Unterlage, Verwertung und Mitteilung ihres Inhalts nicht gestattet, soweit nicht ausdrücklich zugesichert. Zuwiderhandlungen verpflichten zu Schadensersatz. Alle Rechte für den Fall der Patent-, Gebrauchsmuster- oder Geschmacksmustereintragung vorbehalten.
Non è permesso consegnare o fare o riprodurre questo documento, né utilizzare e comunicare o rendere comunque noto a terzi il suo contenuto. Tutti i diritti di proprietà industriale sono riservati, in particolare quelli di brevetto, marchio e modello.
Queda prohibido la entrega a terceros, la copia y el empleo o la comunicación de su contenido, salvo autorización escrita. Todos los derechos de propiedad industrial están reservados, especialmente los de patente, marca y modelo.
Não é permitido a terceiros o fornecimento, a cópia e a utilização ou comunicação do seu conteúdo, salvo autorização por escrito. Todos os direitos de propriedade industrial são reservados, nomeadamente os de patente, marca e modelo.
Copying of this document and giving it to others and the use or communication of the contents thereof, are forbidden without express authority. Offenders are liable to the payment of damages. All rights are reserved in the event of the grant of patent or registration of a utility model or design. This document is the subject of copyright.