PART CODE	MATERIAL	SURFACE PROTECTION
I	STEEL	COATING ZN
II	STEEL	COATING ZN OR ZN/FE
III	STEEL	VARNISH

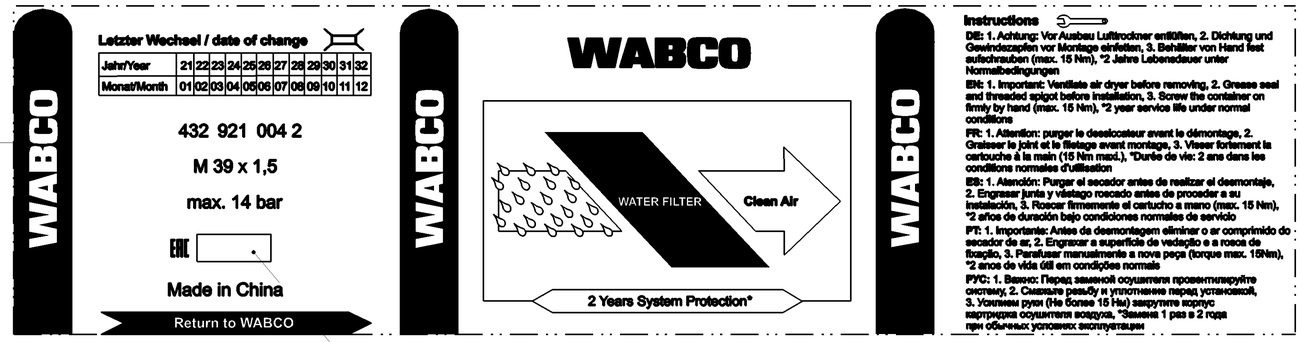

DATE OF MANUFACTURE YEAR MONTH

LABELLING 400 x 105mm

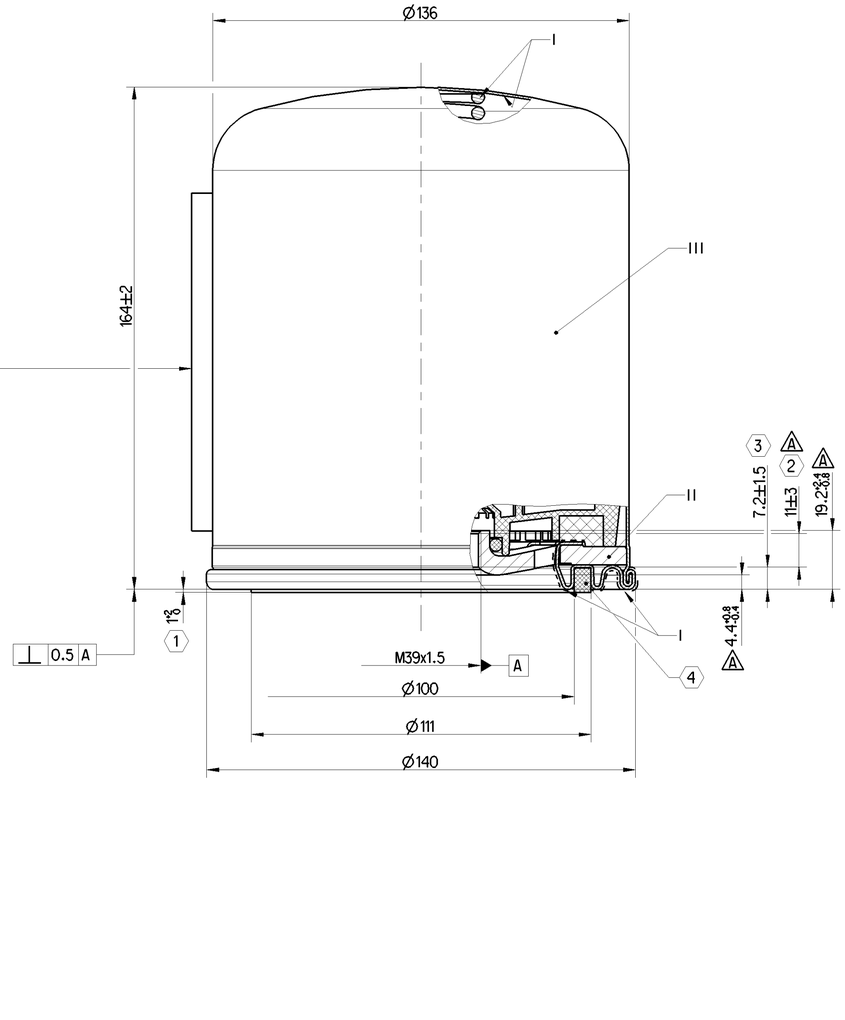

THERMAL RANGE OF APPLICATION: -40°C ... +80°C

WORKING PRESSURE: $P_e$max. = 14bar

(4) SEALING RING (OUTSIDE): NBR 70±5 SHORE A

O-RING: NBR 70±5 SHORE A

PERMISSIBLE LEAKAGE: MAX. 6cm³/min AT 10bar TEST PRESSURE

TEXT: RAL 9010 WHITE

BACKGROUD COLOR: RAL 9005 BLACK

(1) DIMENSION APPLY IF THE SEAL IS IN CONTACT WITH THE GROOVE BOTTOM

(2) MEASURED FROM TOP TO BOTTOM FULL THREAD TURN BY CONTOUR GRAPH

(3) MEASURED FROM BOTTOM FULL THREAD TURN TO FIRST RING RADIUS BY CONTOUR GRAPH

General Specification: JED-334-1 , Size ISO 14405 LP
Further Technical Data: Product Specification
Doc. Code: 035 Sheet: 1 To 3
General Tolerances JED-261

Class 1)		Range of Nominal Dimensions (± mm) ≤ 50	> 50 ≤ 180	> 180 ≤ 400	> 400	∢
Fine	X	0.5	1.0	1.5	2.0	±3°
Medium		1.0	2.0	3.0	4.0	
Coarse		2.0	3.5	5.0	6.5	
Tapped Holes acc.						

1) Tolerance Class Applied Crossmarked

Copyright WABCO®

Date	Signature
Drawn 2021-11-16	Meng
Checked 2021-11-18	Kosirzewa
Expert Kosirzewa	

WABCO

DESICCANT CARTRIDGE

Mass	Scale	Material No.	Date of first issue: 2021-05-26		
2.42 KG	1:1	432 921 004 2	Doc.Code 005	Language EN	Sheet 1/1
Size A 1	CAD System CREO				

ECN-No.	Revision	Techn. Resp.	Replacement for
509682	3 x A	5059	432 410 020 2

100mm

Toute Communication ou reproduction de ce document, toute exploitation ou communication de son contenu sont interdites, sauf autorisation écrite. Tous droits de propriété industrielle réservés, notamment en matière de brevets et de modèles.
Non è permesso consegnare o fare in visione a terzi o riprodurre questo documento, né utilizzarne il contenuto o rendere comunque noto a terzi senza previa autorizzazione scritta. Tutti i diritti di proprietà industriale sono riservati, in particolare quello di brevetto o registrazione di modello industriale.
Weitergabe sowie Vervielfältigung dieser Unterlage, Verwertung und Mitteilung ihres Inhalts nicht gestattet, soweit nicht ausdrücklich zugestanden. Zuwiderhandlungen verpflichten zu Schadensersatz. Alle Rechte für den Fall der Patenterteilung oder Eintragung eines Gebrauchsmusters vorbehalten.
Copying of this document and giving it to others and the use or communication of the contents thereof, are forbidden without express authority. Offenders are liable to the payment of damages. All rights are reserved in the event of the grant of a patent or registration of a utility model or design. This document is the subject of copyright.

Doc. 4320210020 — 002 Status: User Review Version: 3.0 Date: 2021-11-18 Doc. Code: 005