PART CODE	MATERIAL	SURFACE PROTECTION
I	STEEL	HOT DIP METAL COATING
II	STEEL	COATING ZN OR ZN/FE
III	STEEL	VARNISH

<1>	SAFETY CHARACTERISTICS	0
<2>	SIGNIFICANT CHARACTERISTICS	0
<CI>	CUSTOMER INTERFACE	0

LABELLING 400 x 105mm

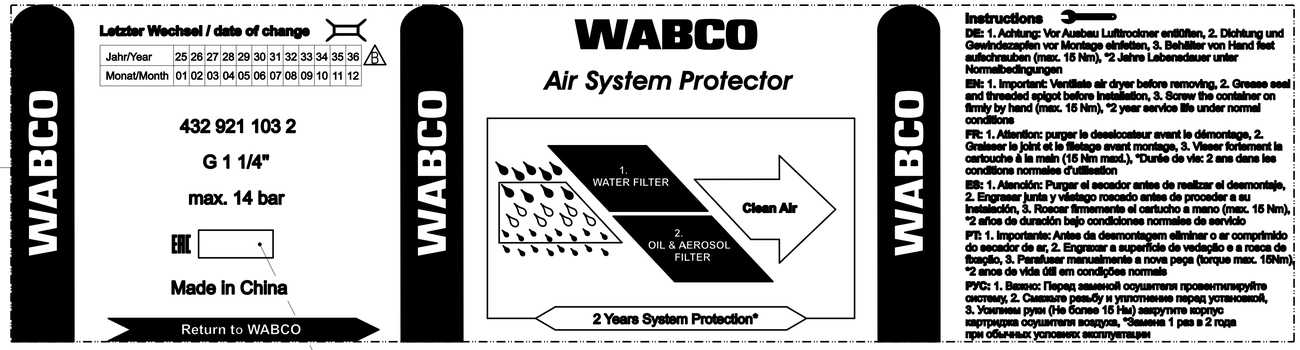

DATE OF MANUFACTURE YEAR MONTH

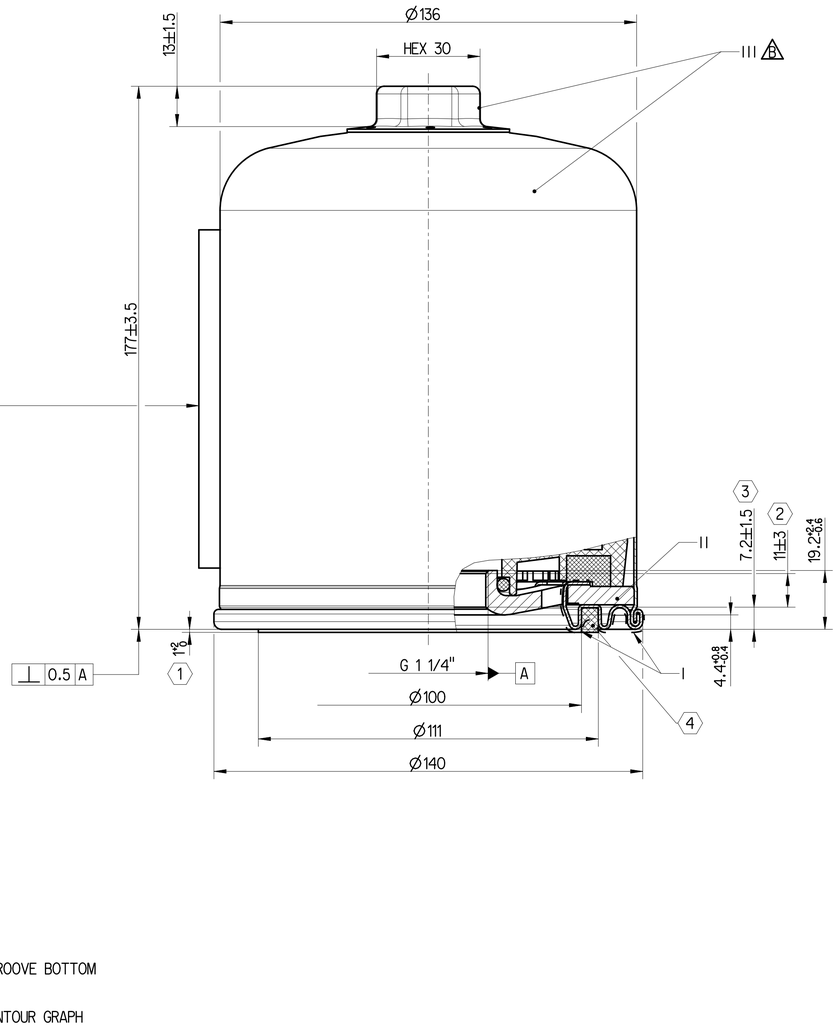

THERMAL RANGE OF APPLICATION: -40°C ... +80°C

WORKING PRESSURE: $P_e$max. = 14bar

4 SEALING RING (OUTSIDE): NBR 70±5 SHORE A

O-RING: NBR 70±5 SHORE A

PERMISSIBLE LEAKAGE: MAX. 6cm³/min AT 10bar TEST PRESSURE

TEXT: PANTONE 293 BLUE

BACKGROUD COLOR: RAL 9006 WHITEALUMINIUM PAINTED

1 DIMENSION APPLY IF THE SEAL IS IN CONTACT WITH THE GROOVE BOTTOM

2 MEASURED FROM TOP TO BOTTOM FULL THREAD TURN BY CONTOUR GRAPH

3 MEASURED FROM BOTTOM FULL THREAD TURN TO FIRST RING RADIUS BY CONTOUR GRAPH

General Specification: ISO 8015, JED-334-1, Size ISO 14405 LP
Further Technical Data: Product Specification
Doc. Code: O35 Sheet: 1 To 3

General Tolerances JED-261

Class 1)		Range of nominal dimensions in mm ≤ 50	> 50 ≤ 180	> 180 ≤ 400	> 400	∢
Fine	X	±0.5	±1	±1.5	±2	±3°
Medium		±1	±2	±3	±4	
Coarse		±2	±3.5	±5	±6.5	

Topped Holes acc.
1) Tolerance Class Applied Crossmarked

Copyright ZF®

Date	Signature
Drawn 2025-12-08	Meng
Checked 2025-12-18	Robak

119 x Ø136
Dimensions in mm

DESICCANT CARTRIDGE

Mass	Scale	Material No.	Date of first issue: 2021-11-03		
2.47 kg	1:1	432 921 103 2	Doc.Code 005	Language EN	Sheet 1/1
Size A 1	CAD System CREO				

ECN-No.	Revision	Techn. Resp.	Replacement for
-	3 x B	5059	432 901 228 2

100mm

Tous droits de propriété industrielle réservés, notamment en matière de brevets et de modèles.
Copyright of this document and giving it to others and the use or communication of the contents thereof, are forbidden without express authority. Offenders are liable to the payment of damages. All rights are reserved in the event of the grant of patent or registration of a utility model or design. The document is the subject of copyright.
Alle Rechte vorbehalten, insbesondere für Patenterteilung oder Gebrauchsmuster-Eintragung vorbehalten.