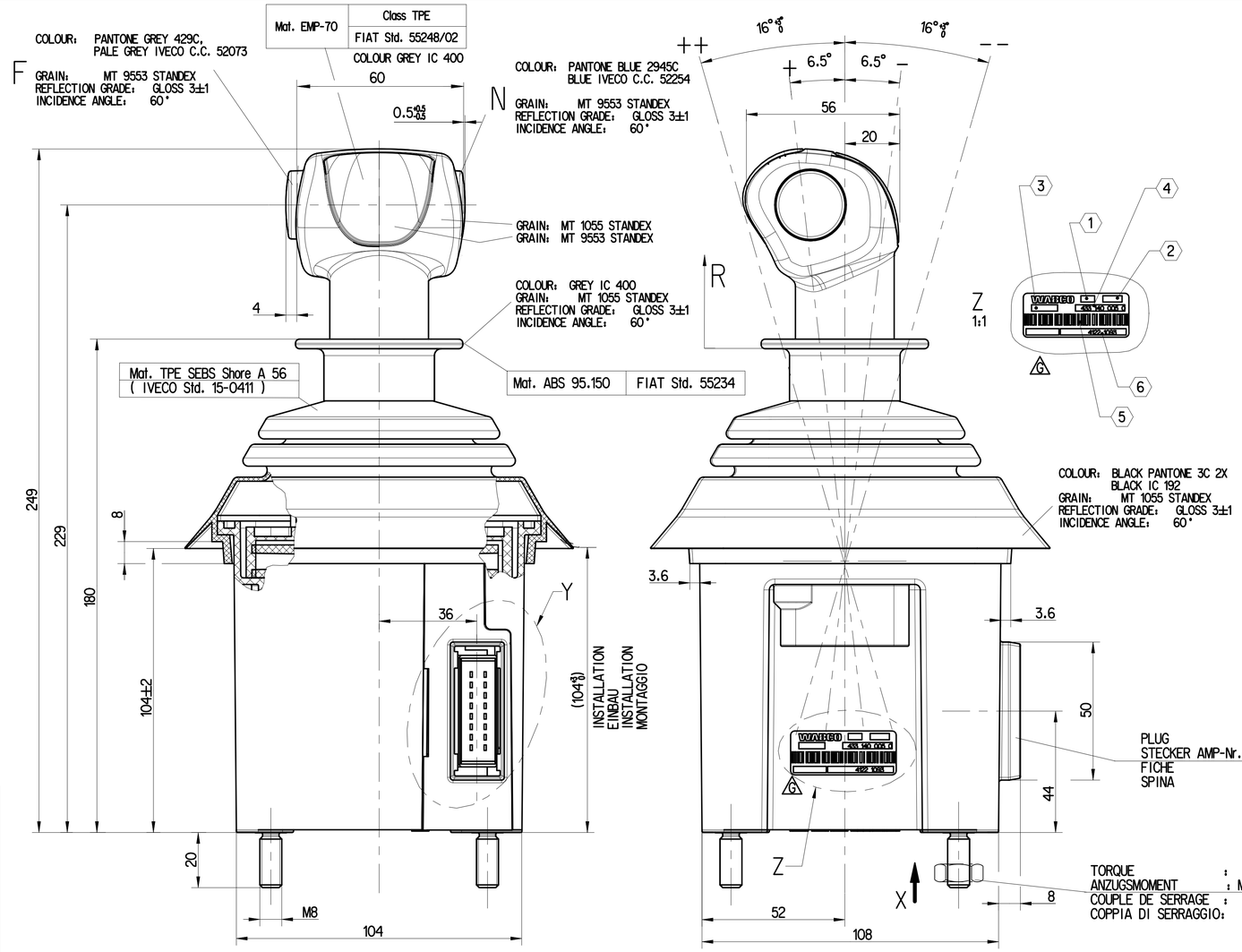

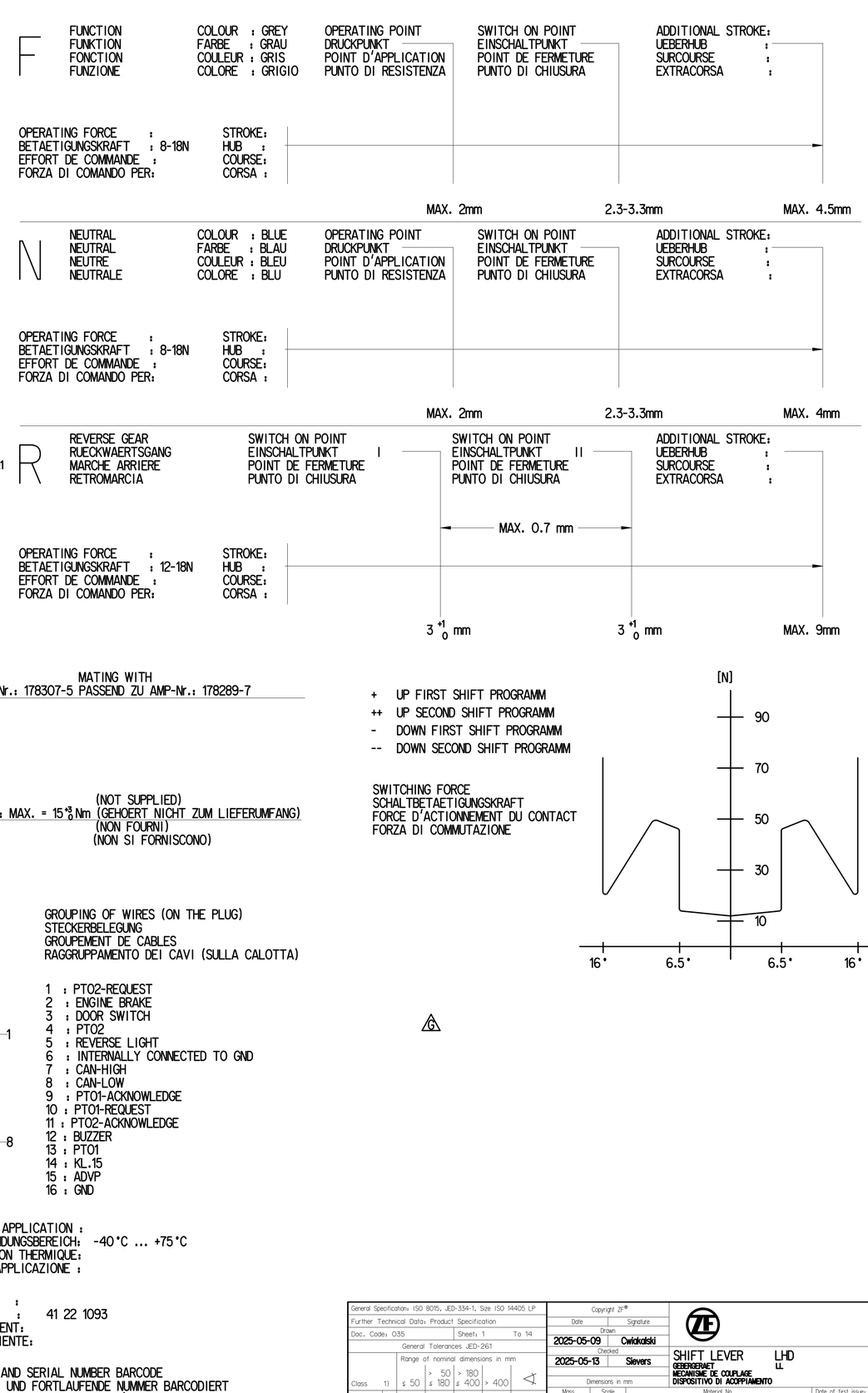

1 PRI NUMBER
PRI NUMMER
NUMERO D' PRI
NUMERO D' PRI

2 WEEK OF MANUFACTURE / YEAR OF MANUFACTURE
FERTIGUNGSWOCHE/-JAHR
SEMAINE DE FABRICATION / ANNEE DE FABRICATION
SETTIMANA DELLA FABBRICAZIONE / ANNO DELLA FABBRICAZIONE

3 SERIAL NUMBER
FORTLAUFENDE NUMMER
NUMERO D'ORDRE
NUMERO PROGRESSIVO

4 WABCO IDENTIFICATION NUMBER
WABCO IDENTIFIKATIONS-NUMMER
WABCO NUMERO D'IDENTIFICATION
WABCO NUMERO D'IDENTIFICAZIONE

5 WABCO IDENTIFICATION.- AND SERIAL NUMBER BARCODE
WABCO IDENTIFIKATIONS.- UND FORTLAUFENDE NUMMER BARCODIERT
WABCO NUMERO D'IDENTIFICATION ET NUMERO D' ORDRE BARCODE
WABCO NUMERO D'IDENTIFICAZIONE E NUMERO PROGRESSIVO BARCODE

General Specification: ISO 8015, JED-334-1, Size ISO 14405 LP						
Further Technical Data: Product Specification						
Doc. Code: O35			Sheet: 1		To 14	
General Tolerances JED-261						
		Range of nominal dimensions in mm				
Class	1)	≤ 50	> 50 ≤ 180	> 180 ≤ 400	> 400	∢
Fine		±0.5	±1	±1.5	±2	±3°
Medium	X	±1	±2	±3	±4	
Coarse		±2	±3.5	±5	±6.5	
Topped Holes acc. ISO 4039 / JED-152						
1) Tolerance Class Applied Crossmarked						

Copyright ZF®

Date	Signature
Drawn 2025-05-09	Cwiokalski
Checked 2025-05-13	Sievers

Dimensions in mm

SHIFT LEVER LHD
GEBERGERAET LL
MECANISME DE COUPLAGE
DISPOSITIVO DI ACCOPPIAMENTO

Mass	Scale	Material No.	Date of first issue: 2007-06-05		
0.9 kg	1:1	433 140 005 0	Doc. Code 005	Language ML	Sheet 1/1
Size A 1	CAD System CREO	ECN-No. 519158	Revision 3 x G	Techn. Resp. 6463	Replacement for -

100mm

Tous droits de propriété industrielle réservés, notamment en matière de brevets et de modèles.
Copying of this document and giving it to others and the use or communication of the contents thereof, are forbidden without express authority. Offenders are liable to the payment of damages. All rights are reserved in the event of the grant of patent or registration of a utility model or design. This document is the subject of copyright.