DC-TITLE / BENENNUNG DC BASIC NUMBER / SACHNUMMER ZGS-STATUS / ZGS-STAND	WABCO DESIGNATION / BENENNUNG WABCO ID NO / PRODUKTNUMMER
LU GEBERGERAET (LINKSLENKER MIT M/A-TASTER - AGS2) A 970 260 06 09	GEBERGERAET AGS2 MIT M/A-TASTER - LL 433 155 011 0 Ⓗ
LU GEBERGERAET (RECHTSLENKER MIT M/A-TASTER - AGS2) A 970 260 07 09	GEBERGERAET AGS2 MIT M/A TASTER - RL 433 155 012 0 Ⓗ

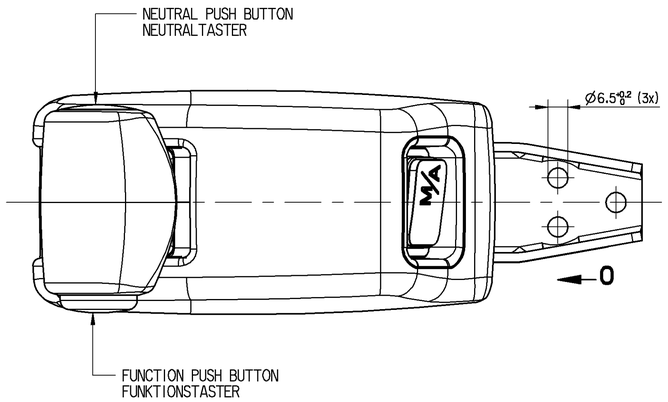

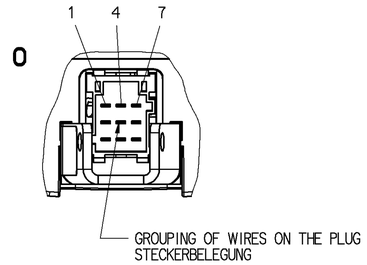

CHAMBER-NO.: KAMMER-NR.:	FUNKTION FUNKTION
1/9	NEUTRAL PUSH BUTTON/TASTER
2/9	GEAR/GANG UP (MAIN LEVER/HAUPTHEBEL)
3/9	GEAR/GANG DOWN (MAIN LEVER/HAUPTHEBEL)
4/9	FUNCTION PUSH BUTTON/FUNKTIONSTASTER
5/9	UGG THROUGH CONNECTED/DURCHGESCHLEIFT
6/9	UGG THROUGH CONNECTED/DURCHGESCHLEIFT
7/9	M/A-NON-LOCKING SWITCH TASTER
8/9	QUIT
9/9	UGG

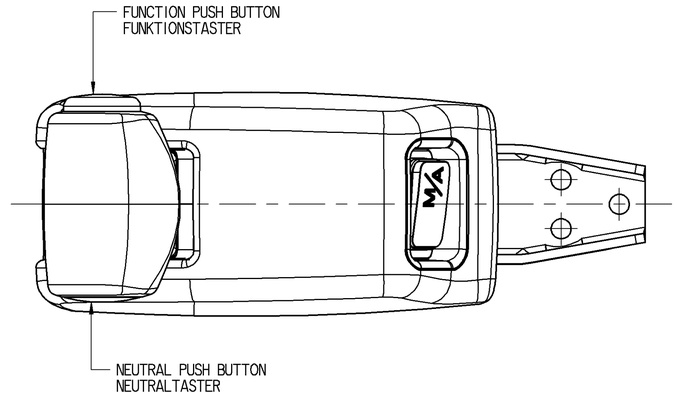

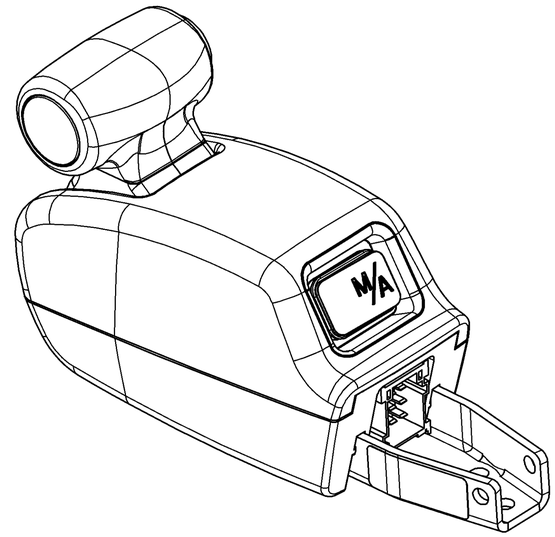

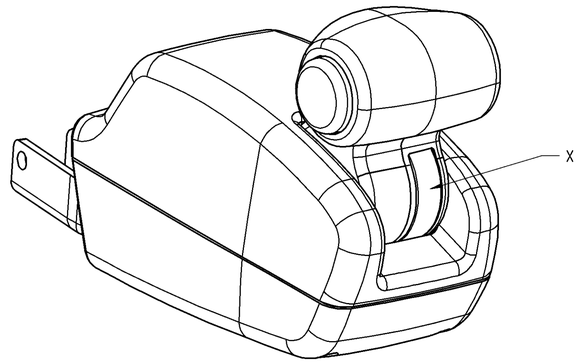

	MATERIAL MATERIAL	SURFACE PROTECTION OBERFLAECHENSCHUTZ	COLOUR FARBE	DECOR
X	PBT GF30 / JED-352.0	/	ANTHRAZIT 9B51	DEK 5300.35

BLOCK DIAGRAM
BLOCKSCHALTBILD FUER 433 155 011 0
433 155 012 0

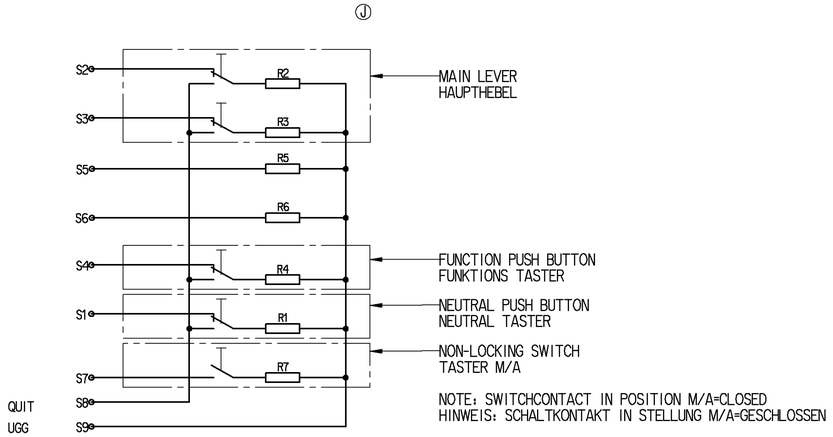

NOTE: SWITCHCONTACT IN POSITION M/A=CLOSED
HINWEIS: SCHALTKONTAKT IN STELLUNG M/A=GESCHLOSSEN

Lieferung nur nach Zeichnung und/oder gebenem Muster. Keinerlei Aenderung Aenderungsvermerk der DaimlerChrysler AG Delivery only in accordance with draw approved sample. No change without data identified with this modification

CAD-Daten sowie erprobtem, freige- ohne vorherige Freigabe durch die mit versehene(n) Zeichnung/CAD-Daten. ing and/or CAD data, and tested and advance approval by the drawing/CAD note by DaimlerChrysler AG.

Lf.Aend./Supp.rev.	Lf./Supp.	Gewicht (kg)	CAD-	ZGS -	ED-KB -
-	-	Weight -	Auftr.-Nr./Order no. -		

Pruefer/Checker	Datum/Date	Norm/Standard	Datum/Date	Abt./Dept.	Name	Datum/Date
-	-	-	-	-	-	-

Mercedes-Benz Benennung/Title
-
TB LU Gebergeraet

Mercedes-Benz Sach-Nr./Basic number	System	Format	Blatt/Sheet
A 943 260 00 09	CATIA	A0	4/4

GENERAL SPECIFICATION:	JED-334-0		
FURTHER TECHNICAL DATA:	433 155 000 0		
DOC. CODE:	SHEET:	TO	

GENERAL TOLERANCES

CLASS 1)	RANGE OF NOMINAL DIMENSIONS (± mm) ≤ 50	> 50 ≤ 180	> 180 ≤ 400	> 400	
FINE	0.5	1.0	1.5	2.0	
MEDIUM X	1.0	2.0	3.0	4.0	±3°
COARSE	2.0	3.5	5.0	6.5	
TAPPED HOLES ACC. ISO 4039 / JED-152					

1) TOLERANCE CLASS APPLIED CROSSMARKED

DCN-NO.	REV.	DATE
092233	15 x J	04-11-05
088786	2x H	04-07-02
088721	1x G	04-05-05

Pro/ENGINEER DRAWING COPYRIGHT	DATE	SIGNATURE
DRAWN	04-02-12	BORCHERS
CHECKED	04-02-12	BORCHERS
EXPERT CODE	2 6 9	

WABCO

GEBERGERAET

MASS	SCALE	PRODUCT IDENTIFICATION NO.	DOC. CODE	SHEET
0.750 KG	1:1	433 155 000 0	653	4/4
SIZE A 1	TRI 570			

FUNCTION CODE	SHAPE CODE	PRODUCT TYPE	REPLACEMENT FOR
		0 2	X 433 155 000 0/01-03-08 G

100mm

Dw.: 433553000__653 14.24 INDUSTRIALIZATION

TML: 433553000__A10 .24

NON È PERMESSO CONDIVIDERE A TERZI O DIFFONDERE QUESTO DOCUMENTO, NE UTILIZZARE IL CONTENUTO O BENEFICIO CHIUNQUE NON È A TERZI. QUESTO DOCUMENTO VIENE FORNITO DAL DIP.ETTO, SOLO PER ATTI INERENTI LA RICHIESTA DA CUI È STATO DATO INCARICO. SE NON ESPRESSAMENTE CONCESSO, QUESTO DOCUMENTO NON DÀ ALCUN DIRITTO DI PROPRIETÀ INTELLETTUALE.

TOUTE COMMUNICATION OU REPRODUCTION DE CE DOCUMENT, TOUTE EXPLOITATION OU COMMUNICATION DE SON CONTENU NE SONT PERMISES SANS AUTORISATION EXPRESSE. SOUS RÉSERVE DE TOUS DROITS EN CAS DE DÉPOSITION DE BREVET, DE DÉCLARATION D'UTILITÉ OU D'ENREGISTREMENT DE MODÈLE DE DÉCORATION.

ESTA PROHIBIDO COMPARTIR CON TERCEROS O DIFUNDIR ESTE DOCUMENTO, UTILIZAR SU CONTENIDO O SACAR BENEFICIO. SOLO ES VÁLIDO PARA EL FIN QUE SE LE ASIGNÓ. SIN PERMISO EXPRESO, ESTE DOCUMENTO NO CONFIERE DERECHOS DE PROPIEDAD INTELECTUAL.

NOT TO BE SHARED WITH THIRD PARTIES OR DISTRIBUTED, ITS CONTENTS MUST NOT BE EXPLOITED OR BENEFITED FROM. ONLY VALID FOR THE PURPOSE FOR WHICH IT WAS ISSUED. WITHOUT EXPRESS PERMISSION, THIS DOCUMENT DOES NOT CONFER ANY INTELLECTUAL PROPERTY RIGHTS.

COPYRIGHT OF THIS DOCUMENT, AND OFFERING IT TO OTHERS AND THE USE OR COMMUNICATION OF THE CONTENTS THEREOF, ARE PROHIBITED WITHOUT EXPRESS AUTHORISATION. ALL RESTRICTION WILL COMMIT THE LIABILITY TO THE DAMAGE OF PATENT OR REGISTRATION OF A UTILITY MODEL OR DESIGN. THIS DOCUMENT IS THE SUBJECT OF COPYRIGHT