| | | |
|---|---|---|
| <1> | SAFETY CHARACTERISTICS | 0 |
| <2> | SIGNIFICANT CHARACTERISTICS | 0 |
| <CI> | CUSTOMER INTERFACE | 0 |

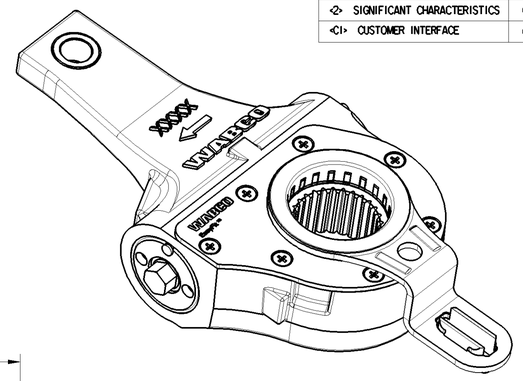


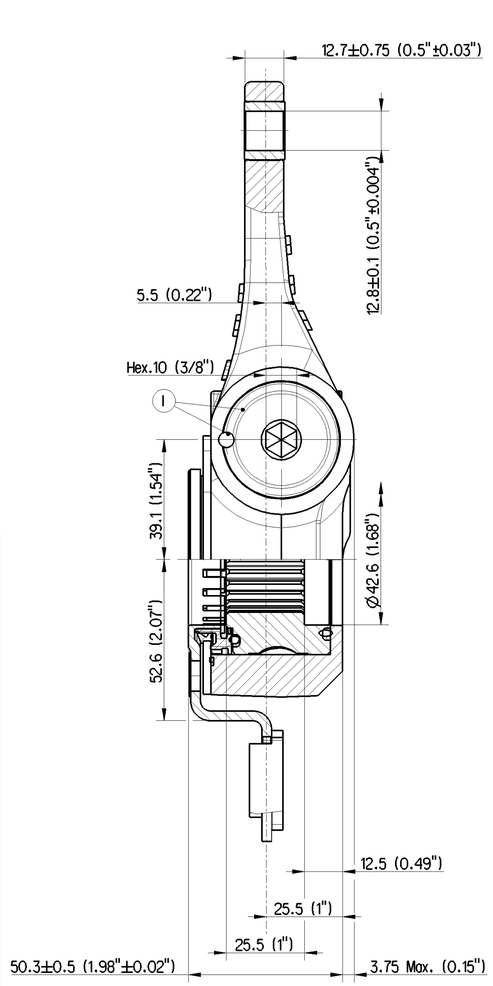


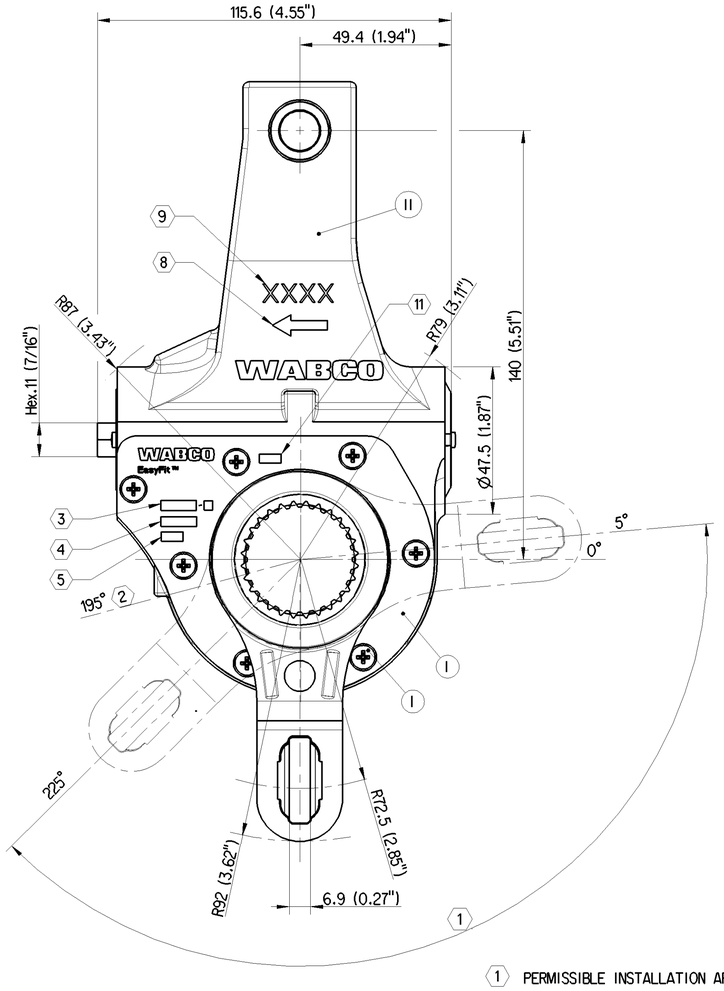


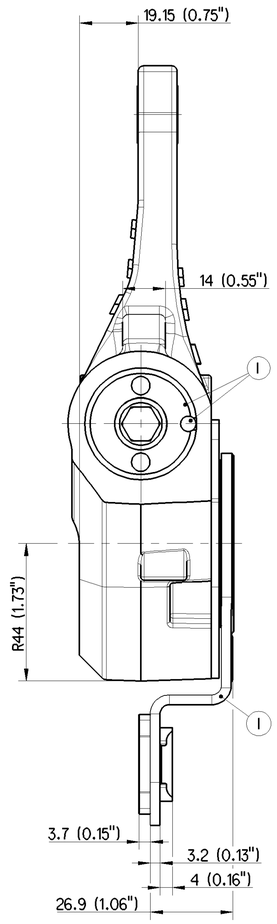


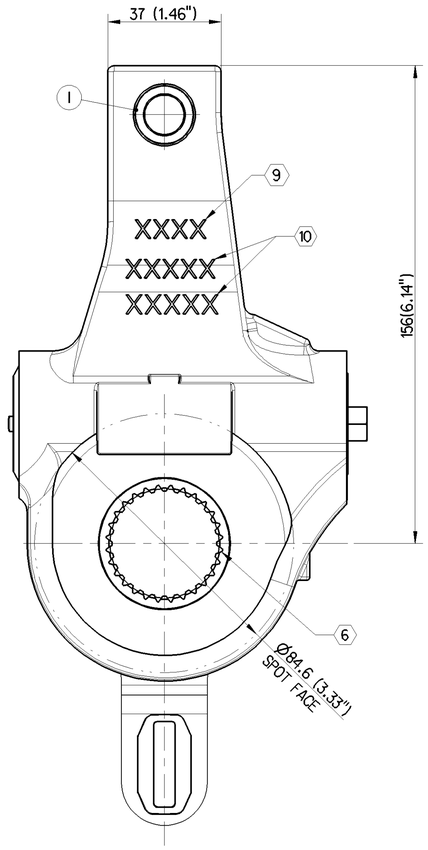


1. PERMISSIBLE INSTALLATION AREA
2. MAXIMUM ANGLE AT FULL CYLINDER STROKE
3. PART NUMBER - REVISION LEVEL (4332250990 -C) △C
4. BATCH NUMBER
5. SERIAL NUMBER
6. INTERNAL SPLINE :
   SPLINE STANDARD : ANSI B92.1, TOLERENCE CLASS 6
   NUMBER OF TEETH : 28
   PRESSURE ANGLE : 37.5°
   SPLINE PITCH : 20/40
7. PRODUCT SPECIFICATION 4332250990
8. WORKING DIRECTION (DIRECTION OF ACTUATING FORCE)
9. LOCATION FOR BODY SUPPLIER CODE / HEAT CODE
10. BODY NUMBER "43390 70306"
11. PRODUCTION RESPONSIBILITY INDICATION

| | |
|---|---|
| WEIGHT | 3 Kg APPROX |
| THE UNIT IS TO BE INSTALLED SUCH THAT THE DIRECTION OF ACTUATING FORCE IS ALWAYS AS INDICATED BY THE ARROW | |
| AUTOMATIC SLACK ADJUSTER IS GREASED FOR LIFE TIME. | |
| AUTOMATIC SLACK ADJUSTER WILL MEET ALL TEST REQUIREMENTS AS PER SAE J1462. | |

| PART CODE | MATERIAL | SURFACE PROTECTION |
|---|---|---|
| I | STEEL | ZINC PLATED |
| II | CAST IRON | POWDER COATED |

General Specification: ISO 8015, JED-334-1, Size ISO 14405 LP
Further Technical Data: 7
Doc. Code: Sheet: To

General Tolerances JED-261

| Class 1) | Range of nominal dimensions in mm ≤ 50 | > 50 ≤ 180 | > 180 ≤ 400 | > 400 | ∢ |
|---|---|---|---|---|---|
| Fine | ±0.5 | ±1 | ±1.5 | ±2 | |
| Medium X | ±1 | ±2 | ±3 | ±4 | ±3° |
| Coarse | ±2 | ±3.5 | ±5 | ±6.5 | |

Tapped Holes acc.
1) Tolerance Class Applied Crossmarked

Copyright WABCO®

| Date | Signature |
|---|---|
| Drawn 2022-07-22 | Noinar |
| Checked 2022-07-25 | Poranjothi |

Dimensions in mm

| Mass | Scale | Material No. | Date of first issue: 2015-03-25 |
|---|---|---|---|
| 2.916 kg | 1:1 | 433 225 099 0 | Doc.Code 005 · Language EN · Sheet 1/1 |
| Size A 1 | CAD System CREO | ECN-No. 506263 · Revision 1 C · Techn. Resp. 5460 | Replacement for - |

**WABCO**

AUTOMATIC SLACK ADJUSTER

Tutte Comunicazioni o riproduzione di questo documento, tutte esplorazione o comunicazione di son contenu sont interdites, sauf autorisation. Tous droits de propriété intellectuelle réservés, notamment en matière de brevets et de modèles.
Non è permesso consegnare o fare a terzi o riprodurre questo documento, né utilizzare il contenuto o renderlo comunque noto a terzi senza espressa autorizzazione. Tutti i diritti di proprietà intellectuale sono riservati, in particolare quelli di brevetto e di modello.
Copying of this document and giving it to others and the use or communication of the contents thereof, are forbidden without express authority. Offenders are liable to the payment of damages. All rights are reserved in the event of the grant of patent or registration of a utility model or design. This document is the subject of copyright.
Weitergabe sowie Vervielfältigung dieser Unterlage, Verwertung und Mitteilung ihres Inhalts nicht gestattet, soweit nicht ausdrücklich zugestanden. Zuwiderhandlungen verpflichten zu Schadenersatz. Alle Rechte für den Fall der Patent- oder Gebrauchsmustererteilung vorbehalten.