14C12	+0.275 / +0.095

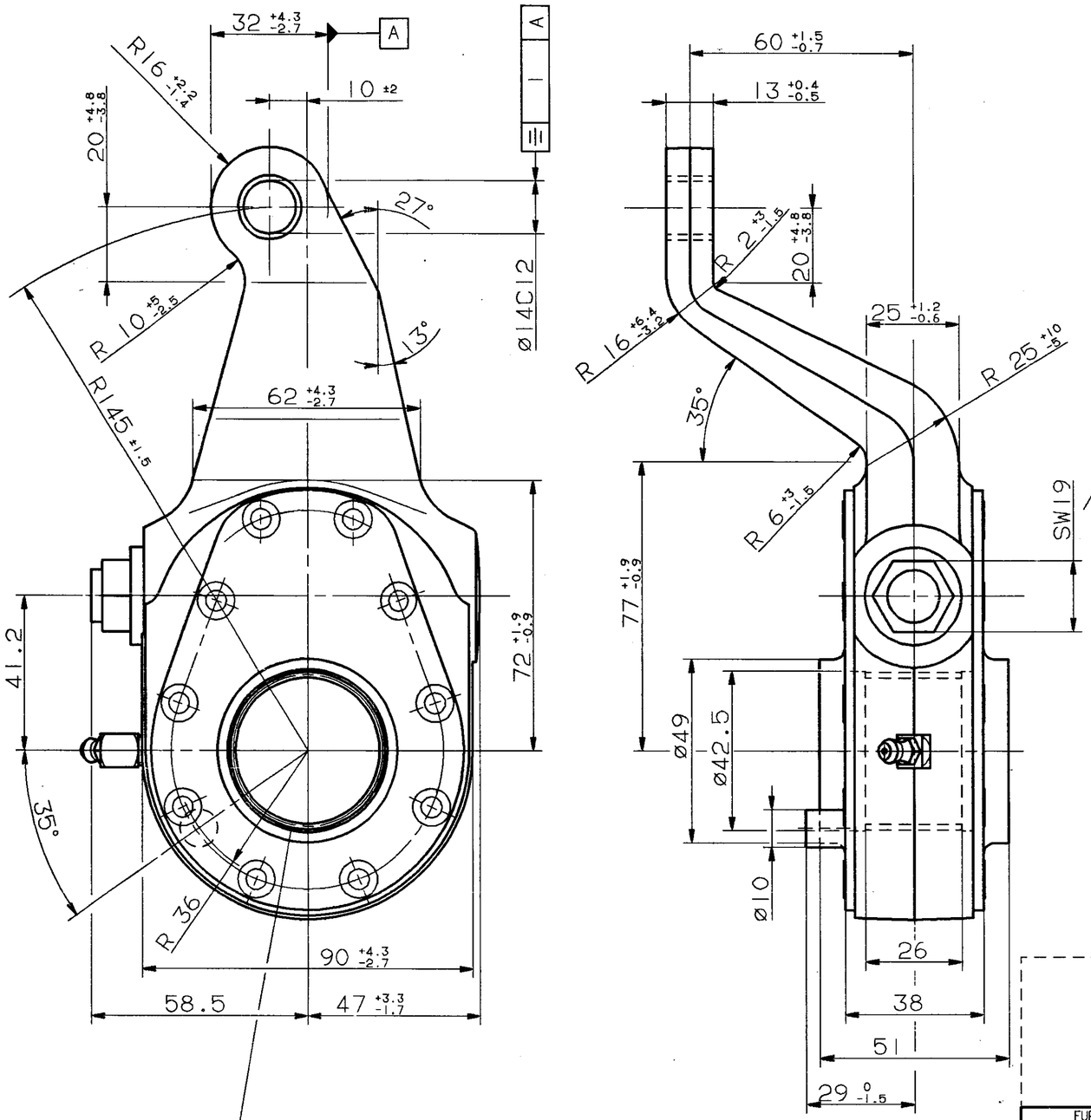

TORQUE:
DREHMOMENT:
COUPLE DE ROTATION: ≥ 9.5 Nm
COPPIA TORCENTE:
TORQUE:

SURFACE PROTECTION EXCEPT HOLES, TOOTHING OF WORM WHEEL AND LUBRICATION FITTING:

OBERFLAECHENSCHUTZ AUSSER BOHRUNGEN, SCHNECKENRADVERZAHNUNG UND SCHMIERNIPPEL:

PROTECTION DE SURFACE SAUF LES TROUS, LA DENTURE DE LA ROUE-VIS ET GRAISSEUR: 852 004 710 4 (JED-471)

PROTEZIONE SUPERFICI ECCETTO I FORI, LA DENTATURA DELLA RUOTA ELICOIDALE E INGRASSATORE:

PINTAR COM TINTA CONF. 852 004 710 4 (JED-471) EXCETO OS FUROS, COROA E ENGRAXADEIRA.

PROFILE:
PROFIL:
PROFILE: N42X1.5X26X9H DIN 5480
PROFILO:
PERFIL:

FURTHER TECHNICAL DATA SEE
IDENTIFICATION NO:
CODE FOR DOCUMENT: 605 SHEET: TO

GENERAL TOLERANCES

CLASS	RANGE OF NOMINAL DIMENSIONS (± mm) 1)	≤50	> 50 ≤180	> 180 ≤400	>400	∠
I		0,5	1,0	1,5	2,0	
II	X	1,0	2,0	3,0	4,0	± 3°
III		2,0	3,5	5,0	6,5	

TAPPED HOLES ACC. ISO 4039 / JED-152
1) TOLERANCE CLASS APPLIED CROSSMARKED

DCN-NO	REV.	DATE
	L	
	K	
	J	
	H	
	G	
	F	
	E	
	D	
	C	
	B	
	A	

COPYRIGHT

DATE	SIGNATURE
DRAWN 85-12-12	FREIM.
CHECKED "	FRANIA
STANDARDIZATION "	PANT.

WABCO — CLAYTON DEWANDRE

SLACK ADJUSTER
GESTAENGESTELLER (GSK)
LEVIER-CAME REGLABLE
REGISTRATORE DEI CEPPI
AJUSTADOR DE FOLGA

MASS	SCALE	PRODUCT IDENTIFICATION NO.	CODE FOR DOCUMENT	SHEET
~3.3 kg	1:1	433 536 529 0	605	1/1
SIZE	T.R.I.	CODE F.PROD.-GROUP	CODE FOR SHAPE	REPLACEMENT FOR
A 2	140	545		

EXPERT CODE 7 3 2 TYPE OF PRODUCT 0 1 X

TOUTE COMMUNICATION OU REPRODUCTION DE CE DOCUMENT, TOUTE EXPLOITATION OU COMMUNICATION DE SON CONTENU SONT INTERDITES, SAUF AUTORISATION EXPRESSE. TOUT MANQUEMENT A CETTE REGLE CONSTITUE UN ABUS EVIDENT ET EXPOSE SON AUTEUR AU VERSEMENT DE DOMMAGES ET INTERETS. TOUS DROITS RESERVES, NOTAMMENT EN MATIERE DE BREVETS ET DE MODELES.

NOV E PERMESSO CONSEGNARE A TERZI O RIPRODURRE QUESTO DOCUMENTO, NE UTILIZZARNE IL CONTENUTO O RENDERLO NOTO A TERZI SENZA AUTORIZZAZIONE ESPLICITA. OGNI INFRAZIONE COSTITUISCE UN EVIDENTE ABUSO E COMPORTERA IL RISARCIMENTO DEI DANNI. SI RITIENE PARIMENTI LESIVO DI TUTTI I DIRITTI DERIVANTI DA BREVETTI O MODELLI.

WEITERGABE SOWIE VERVIELFAELTIGUNG DIESER UNTERLAGE, VERWERTUNG UND MITTEILUNG IHRES INHALTS NICHT GESTATTET, SOWEIT NICHT AUSDRUECKLICH ZUGESTANDEN. ZUWIDERHANDLUNGEN STELLEN EINEN OFFENSICHTLICHEN MISSBRAUCH DAR UND VERPFLICHTEN ZU SCHADENERSATZ. ALLE RECHTE FUER DEN FALL DER PATENTERTEILUNG ODER GEBRAUCHSMUSTER - EINTRAGUNG VORBEHALTEN.

COPYING OF THIS DOCUMENT, AND GIVING IT TO OTHERS AND THE USE OR COMMUNICATION OF THE CONTENTS THEREOF, ARE FORBIDDEN WITHOUT EXPRESS AUTHORITY. CONTRAVENTION OF THIS RESTRICTION WILL CONSTITUTE AN EVIDENT ABUSE AND RESULT IN A LIABILITY TO THE PAYMENT OF DAMAGES. ALL RIGHTS ARE RESERVED IN THE EVENT OF THE GRANT OF A PATENT OR THE REGISTRATION OF AN UTILITY MODEL OR DESIGN. THIS DRAWING IS SUBJECT TO COPYRIGHT.