SURFACE PROTECT. OBERFL. SCHUTZ	
I	JED-260
II	JED-256-1
III	JED-739-3 Ⓗ

IDENTIFICATION ACCORDING TO:
KENNZEICHNUNG NACH:
IDENTIFICATION SUIVANT:
INDICAZIONE SECONDO: JED-341

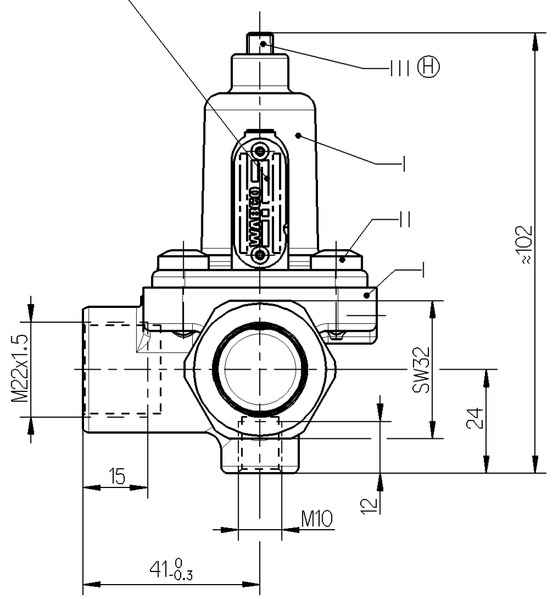

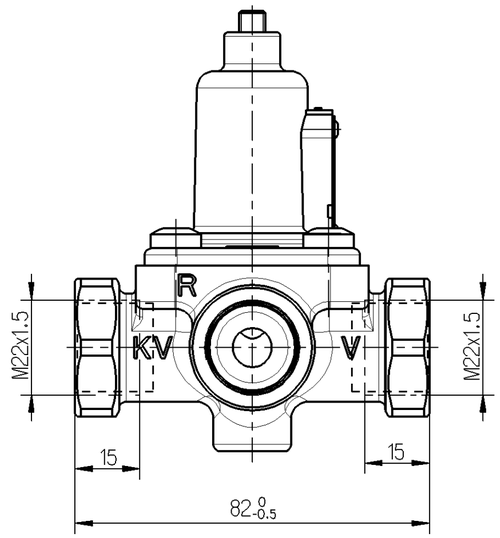

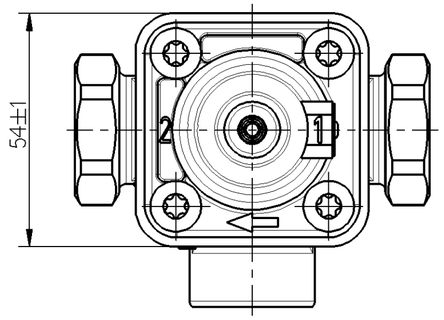

WORKING PRESSURE:
BETRIEBSDRUCK:
PRESSION DE SERVICE:
PRESSIONE D'ESERCIZIO: P_e = MAX. 10 bar

THERMAL RANGE OF APPLICATION:
TERMISCHER ANWENDUNGSBEREICH:
GAMME D' APPLICATION THERMIQUE:
CAMPO DI APPLICAZIONE TERMICA: -40°C. . . +80°C

MEDIUM: AIR
MEDIUM: LUFT
FLUIDE: AIR
FLUIDO: ARIA

NOMINAL DIAMETER:
NENNWEITE:
DIAMETRE NOMINAL:
DIAMETRO NOMINALE: ∅8 mm = 50 mm²

CHARGING PRESSURE:
UEBERSTROEMDRUCK:
PRESSION DE BARRAGE:
PRESSIONE DI PRESA: $P_e = 4.5^{0.3}_{0}$ bar

CLOSING PRESSURE: 85% OF CHARGING PRESSURE
SCHLIESSDRUCK: 85% DES UEBERSTROEMDRUCKES
PRESSION DE FERMETURE: 85% DE PRESSION DE BARRAGE
PRESSIONE DI CHIUSURA: 85% DI PRESSIONE DI PRESA

V (1) RESERVOIR
VORRATSBEHAELTER
RESERVOIR
SERBATOIO

KV (21) TRAILER
ANHAENGER
REMORQUE
RIMORCHIO

R (22) PRESSURE SEFEGUARD RELAY
DRUCKSICHERUNGS-RELAIS

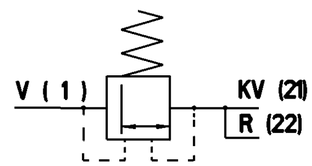

CUSTOMERS NO.
KUNDEN-NR.
NO. CLIENT
CLIENTE

Ⓗ

PRI

BARCODE-WABCO
BARCODE-WABCO
CODEBARRE-WABCO
CODICE A BARRE-WABCO

DATE OF MANUFACTURE
HERSTELLDATUM
DATE DE FABRICATION
DATA DI FABBRICAZIONE

WABCO IDENTIFICATION NUMBER
WABCO IDENTIFIKATIONS NUMMER
WABCO NUMERO D' IDENTIFICATION
WABCO NUMERO D' IDENTIFICAZIONE

TORQUE FOR CONNECTIONS:
ANZUGSMOMENT FUER EINSCHRAUBSTUTZEN:
COUPLE DE SERRAGE DES RACCORDS:
COPPIA DI SARRAGGIO DEI RACCORDI: M22x1.5: $M_{max.}$ = 53 Nm

General Specification: JED-334-0					
Further Technical Data:					
Doc. Code:		Sheet:		To	
General Tolerances JED-261					
		Range of Nominal Dimensions (± mm)			
Class 1)		≤ 50	> 50 ≤ 180	> 180 ≤ 400	> 400
Fine		0.5	1.0	1.5	2.0
Medium	X	1.0	2.0	3.0	4.0
Coarse		2.0	3.5	5.0	6.5
Tapped Holes acc.					
1) Tolerance Class Applied Crossmarked					

Copyright WABCO®

	Date	Signature
Drawn	2009-07-03	Gontarz
Checked	2009-08-12	Czapiewski
Expert	CZAPIEWSKI	

WABCO

PRESSURE CONTROL VALVE Ⓗ
DRUCKREGELVENTIL
VALVE DE REGLAGE DE LA PRESSION
VALVOLA DI COMANDO DELLA PRESSIONE

Mass	Scale	Material No.	Date of first issue: 2009-08-12		
Ⓗ 0.551 KG	1:1	434 403 000 0	Doc.Code	Language	Sheet
			005	ML	1/1
Size	CAD System				
A 2	Pro/E				

ECN-No.	Revision	Techn. Resp.	Replacement for
115949	6 H	5130	

100mm

Toute Communication ou reproduction de ce document, toute exploitation ou communication de son contenu sont interdites, sauf autorisation expresse. Tout manquement à cette règle constitue un abus évident et expose son auteur au versement de dommages et intérêts. Tous droits de propriété industrielle réservés, notamment en matière de brevets et de modèles.

Weitergabe sowie Vervielfältigung dieser Unterlage, Verwertung und Mitteilung ihres Inhalts nicht gestattet, soweit nicht ausdrücklich zugestanden. Zuwiderhandlungen stellen einen offensichtlichen Missbrauch dar und verpflichten zu Schadenersatz. Alle Rechte für den Fall der Patenterteilung oder Gebrauchsmusterer Eintragung vorbehalten.

Non è permesso consegnare a terzi o riprodurre questo documento, né utilizzarne il contenuto o renderlo comunque noto a terzi senza autorizzazione espressa. Ogni rimanente costituirà un evidente abuso e comporterà il risarcimento dei danni subiti. Ci riserviamo ogni diritto derivante da brevetto o modello.

Copying of this document and giving it to others and the use or communication of the contents thereof, are forbidden without express authority. Offenders are liable to the payment of damages. All rights are reserved in the event of the grant of patent or registration of a utility model or design. This document is the subject of copyright.

dwg: 434403000_____005 / Version: -7 / status: Under Review / mdl: 434403000_____A02