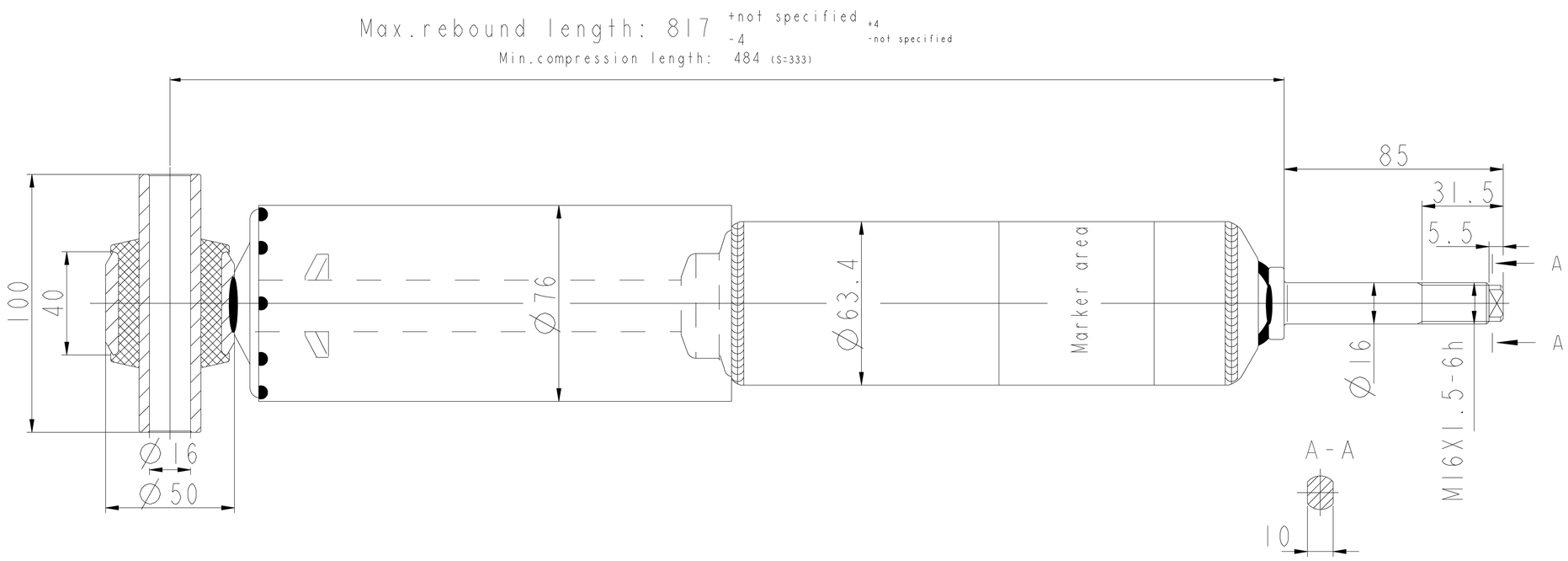

ACCESSORY:

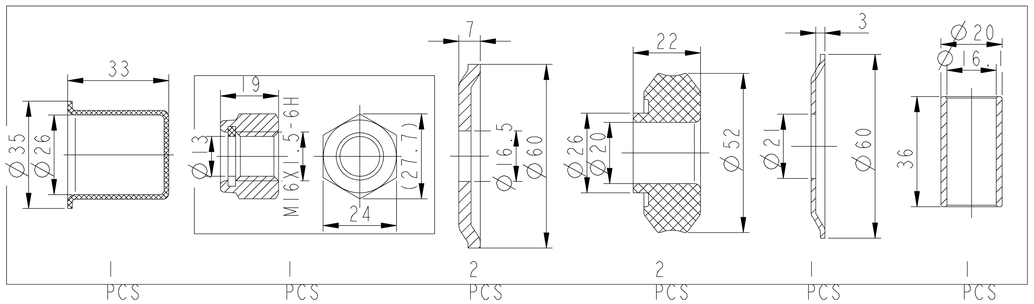

ADD damping force specification - Hydraulic

V(m/s)	0.079	0.157	0.314	0.520	
Pf(N)	2157	4884	9684	13594	
Py(N)	974	1503	2196	2942	
S(mm)	60		rebound(N)		

DESIGNED BY	CHECKED BY	APPROVED BY	DATE	FILE NAME	DATE	SCALE
Zhang shikai	Zhao chao	Gui dongming			06/02/2008	

ADD INDUSTRY CO., LTD.

SHOCK ABSORBER DRAWING

DRAWING NUMBER	ADD NO.	186173
AHN60173	WABCO NO.	438 600 324 0

Colour: RAL 9005B Semi-Black

General Specification: JED-334-0
Further Technical Data:
Doc. Code: Sheet: To

General Tolerances JED-261

Class 1)	< 50	> 50 < 180	> 180 < 400	> 400	
Fine	0.5	1.0	1.5	2.0	
Medium	1.0	2.0	3.0	4.0	±3°
Coarse	2.0	3.5	5.0	6.5	

Range of Nominal Dimensions (± mm)

Tapped Holes acc.
1) Tolerance Class Applied Crossmarked

DCN-No.	Rev.	Date
117413	A	13-06-2008

State of Revision

Copyright WABCO ®

Date	Signature
Drawn 2008-06-02	BASINSKI
Checked 2008-06-04	COUPPEE
Expert	HAIGH

WABCO

SHOCK ABSORBER

Mass	Scale	Material No.	WABCO Id. No.: 438 600 324 0		
6.2 KG	1:1	438 600 324 0	Doc.Code 005	Language EN	Sheet 1/1
Size A 1	TRI 560	Function Code	CAD System Pro/E	Prod.Type	Replacement for

100mm

Toute Communication ou reproduction de ce document, toute exploitation ou communication de son contenu sont interdites, sauf autorisation expresse. Tous droits de propriété industrielle réservés, notamment en matière de brevets et de modèles.
Weitergabe sowie Vervielfältigung dieser Unterlage, Verwertung und Mitteilung ihres Inhalts nicht gestattet, soweit nicht ausdrücklich zugesichert. Zuwiderhandlungen verpflichten zu Schadenersatz. Alle Rechte für den Fall der Patenterteilung oder Gebrauchsmustereintragung vorbehalten.
Non è permessa consegna o terzi o riprodurre questo documento, né utilizzare il contenuto o renderlo comunque noto a terzi senza autorizzazione esplicita. Tutti i diritti di proprietà industriale sono riservati, in particolare quello di brevetti o modelli.
E'vietata riserva di tutti i diritti derivanti da brevetti o modelli.
Copying of this document and giving it to others and the use or communication of the contents thereof, are forbidden without express authority. Offenders are liable to the payment of damages. All rights are reserved in the event of the grant of patent or registration of a utility model or design. This document is the subject of copyright.