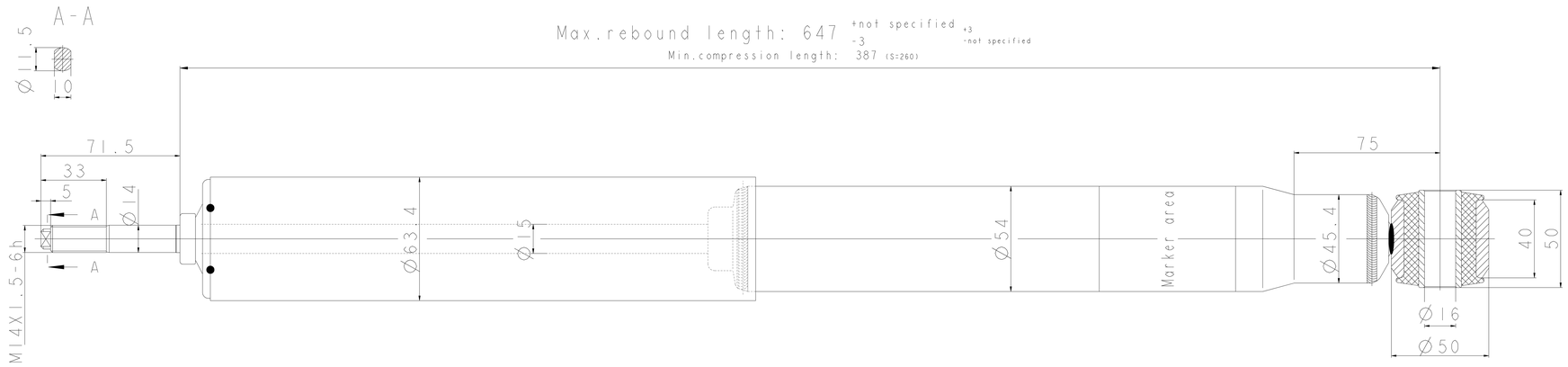


# ACCESSORY:

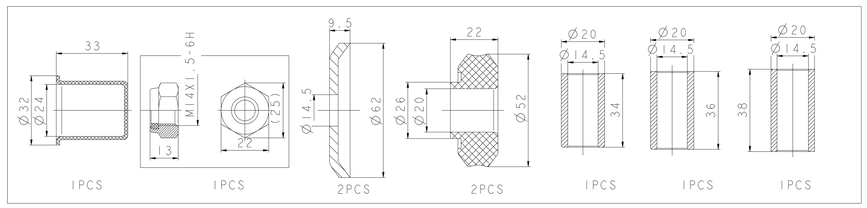


SAMPLE damping force specification - Hydraulic

| | | | | | |
|---|---|---|---|---|---|
| V(m/s) | 0.079 | 0.157 | 0.314 | 0.520 | |
| Pf(N) | 1075 | 2755 | 4215 | 4875 | |
| Py(N) | 505 | 560 | 635 | 865 | |
| S(mm) | 60 | | Rebound(N) | | |

| DESIGNED BY | CHECKED BY | APPROVED BY | DATE | FILE NAME | DATE | SCALE |
|---|---|---|---|---|---|---|
| Zhang shikai | Zhao chao | Gui dongming | | | 06/02/2008 | |

ADD INDUSTRY CO., LTD.

SHOCK ABSORBER DRAWING

| DRAWING NUMBER | | |
|---|---|---|
| AHN51040 | ADD NO. | 186748 |
| | WABCO NO. | 438 600 325 0 |

Colour: RAL 9005B Semi-Black

General Specification: JED-334-D
Further Technical Data:
Doc. Code: Sheet: To
General Tolerances JED-261

| Class 1) | Range of Nominal Dimensions ( ± mm) < 50 | > 50 < 180 | > 180 < 400 | > 400 | |
|---|---|---|---|---|---|
| Fine | 0.5 | 1.0 | 1.5 | 2.0 | |
| Medium X | 1.0 | 2.0 | 3.0 | 4.0 | ±3° |
| Coarse | 2.0 | 3.5 | 5.0 | 6.5 | |

Tapped Holes acc.
1) Tolerance Class Applied Crossmarked

| DCN-No. | Rev. | Date |
|---|---|---|
| 117413 | A | 13-06-2008 |

State of Revision

Copyright WABCO ©
Date / Signature
Drawn 2008-06-02 BASINSKI
Checked 2008-06-04 COUPPEE
Expert HAIGH

WABCO

SHOCK ABSORBER

| Mass. | Scale | Material No. | WABCO Id. No.: 438 600 325 0 | | |
|---|---|---|---|---|---|
| 3.6 KG | 1:1 | 438 600 325 0 | Doc. Code: 005 | Language: EN | Sheet: 1/1 |
| Size: A 0 | Title: 560 | | | | |

Function Code | CAD System | Prod.Type | Replacement for

100mm

Tale Comunicatio tu riproduce ai sic documenti, tale restrizione su comunicatio da un settore per ulteriori, ruf automotivi agenzie. Tut documenti e alle regole contrar o data avuti e copie da tutto le ordinarie dei disegni e informazioni. Ogni distribuzione contrario a quanto dovuto consenso. Ogni riproduzione contrario a quanto dovuto consenso. Ogni utilizzo contrario a quanto dovuto consenso.

Copyright WABCO

Copyright WABCO

Copyright WABCO