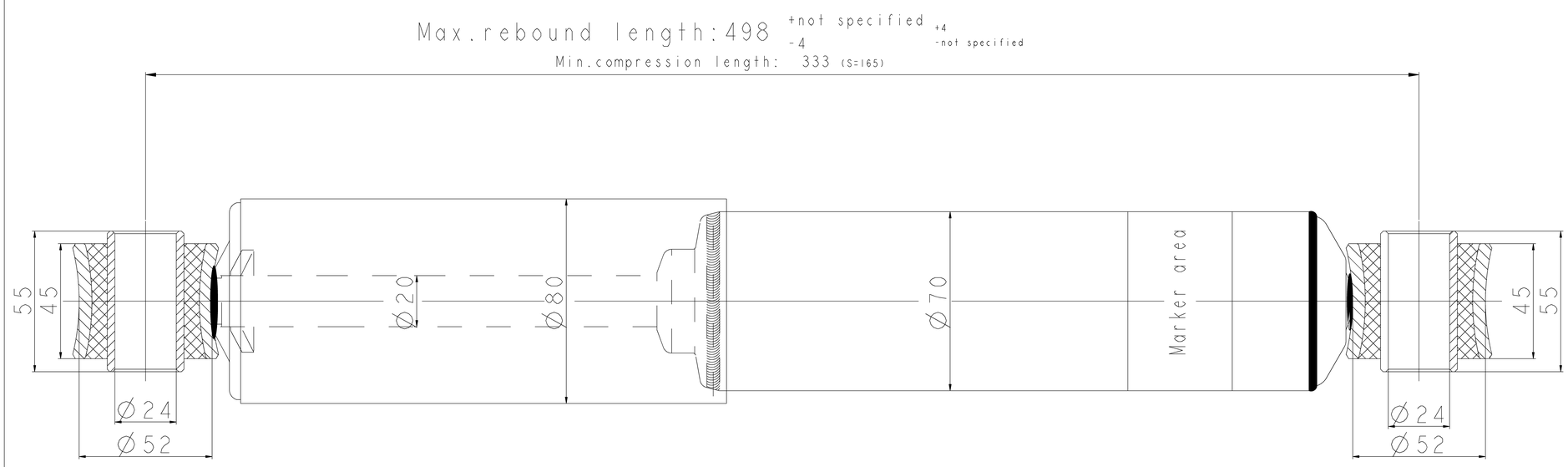

ADD damping force specification - hydraulic

V(m/s)	0.079	0.157	0.314	0.520	0.750
Pf(N)	3615	6074	9636	12969	18705
Py(N)	1278	1843	2953	4153	5990
S(mm)	60		rebound(N)		

DESIGNED BY	CHECKED BY	APPROVED BY DATE	FILE NAME	DATE	SCALE
Zhang shikai	Zhao chao	Gui dongming		06/02/2008	

ADD INDUSTRY CO., LTD.

SHOCK ABSORBER DRAWING

DRAWING NUMBER		
AHN70049	ADD NO.	186749
	WABCO	438 601 066 0
	NO.	

Colour: RAL 9005B Semi-Black

General Specification: JED-334-0
Further Technical Data:
Doc. Code: Sheet: To
General Tolerances JED-261

Class 1)	Range of Nominal Dimensions (± mm) < 50	> 50 < 180	> 180 < 400	> 400	
Fine	0.5	1.0	1.5	2.0	±3°
Medium X	1.0	2.0	3.0	4.0	
Coarse	2.0	3.5	5.0	6.5	

Tapped Holes acc.
1) Tolerance Class Applied Crossmarked

DCN-No.	Rev.	Date
117413	A	13-06-2008

State of Revision

Copyright WABCO ®

Date	Signature
Drawn 2008-06-03	BASINSKI
Checked 2008-06-04	COUPPEE
Expert HAIGH	

WABCO
SHOCK ABSORBER

Mass	Scale	Material No.	WABCO Id. No.: 438 601 066 0		
5.2 KG	1:1	438 601 066 0	Doc.Code 005	Language EN	Sheet 1/1
Size A 1	TRI 560	Function Code	CAD System Pro/E	Prod.Type	Replacement for

100mm

Toute Communication ou reproduction de ce document, toute exploitation ou communication de son contenu sont interdites, sauf autorisation expresse. Tout manquement à cette règle constitue un abus évident et expose son auteur au versement de dommages et intérêts. Tous droits de propriété industrielle réservés, notamment en matière de brevets et de modèles.
Non è permesso consegnare a terzi o riprodurre questo documento, né utilizzarne il contenuto o renderlo comunque noto a terzi senza autorizzazione esplicita. Ogni mancanza costituisce un evidente abuso e comporterà il risarcimento dei danni subiti. E' fatto riserva di tutti i diritti derivanti da brevetti o modelli.
Copying of this document and giving it to others and the use or communication of the contents thereof, are forbidden without express authority. Contravention of this restriction will constitute an evident abuse and result in a liability to the payment of damages. All rights are reserved in the event of the grant of patent or registration of a utility model or design. This document is the subject of copyright.
Weitergabe sowie Vervielfältigung dieser Unterlage, Verwertung und Mitteilung ihres Inhalts nicht gestattet, soweit nicht ausdrücklich zugestanden. Zuwiderhandlungen stehen offensichtlich Missbrauch dar und verpflichten zu Schadenersatz. Alle Rechte für den Fall der Patenterteilung oder Gebrauchsmustereintragung vorbehalten.