Max.rebound length: 425 +not specified -4 +4 -not specified

Min.compression length: 300 (S=125)

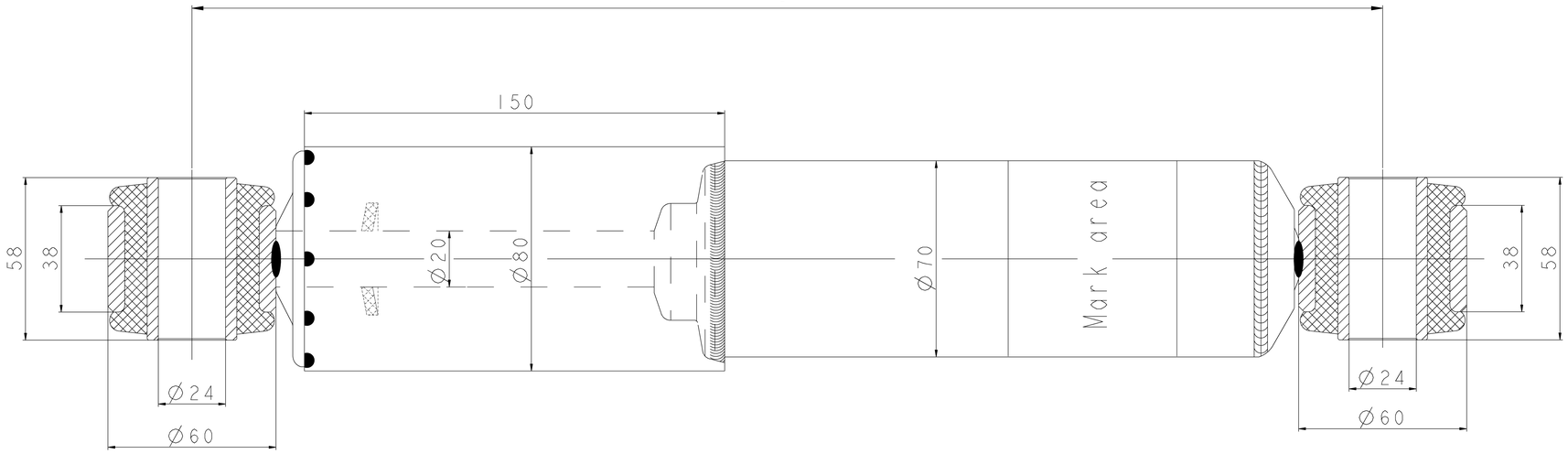

ADD damping force specification - hydraulic

V(m/s)	0.079	0.157	0.314		
Pf(N)	8363	12964	16889		
Py(N)	4513	5919	8314		
S(mm)	60		rebound(N)		

DESIGNED BY	CHECKED BY	APPROVED BY DATE	FILE NAME	DATE	SCALE
Zhang shikai	Zhao chao	Gui dongming		06/02/2008	

ADD INDUSTRY CO., LTD.

SHOCK ABSORBER DRAWING

DRAWING NUMBER		
AHN60243	ADD NO.	186243
	WABCO NO.	438 601 067 0

Colour: RAL 9005B Semi-Black

General Specification: JED-334-0

Further Technical Data:

Doc. Code: Sheet: To

General Tolerances JED-261

Class 1)	Range of Nominal Dimensions (± mm) < 50	> 50 < 180	> 180 < 400	> 400	
Fine	0.5	1.0	1.5	2.0	±3°
Medium	1.0	2.0	3.0	4.0	
Coarse	2.0	3.5	5.0	6.5	

Tapped Holes acc.

1) Tolerance Class Applied Crossmarked

DCN-No.	Rev.	Date
117413	A	13-06-2008

State of Revision

Copyright WABCO ®

	Date	Signature
Drawn	2008-06-03	BASINSKI
Checked	2008-06-04	COUPPEE
Expert	HAIGH	

WABCO

SHOCK ABSORBER

Mass	Scale	Material No.	WABCO Id. No.: 438 601 067 0		
4.7 KG	1:1	438 601 067 0	Doc.Code 005	Language EN	Sheet 1/1
Size A 1	TRI 530		Function Code	CAD System Pro/E	Prod.Type

Replacement for

100mm

Toute Communication ou reproduction de ce document, toute exploitation ou communication de son contenu sont interdites, sauf autorisation expresse. Tout manquement à cette interdiction expose son auteur au paiement de dommages et intérêts. Tous droits de propriété industrielle réservés, notamment en matière de brevets et de modèles.

Weitergabe sowie Vervielfältigung dieser Unterlage, Verwertung und Mitteilung ihres Inhalts nicht gestattet, soweit nicht ausdrücklich zugesichert. Zuwiderhandlungen verpflichten zu Schadensersatz. Alle Rechte für den Fall der Patenterteilung oder Gebrauchsmustereintragung vorbehalten.

Non è permesso consegnare o fare a terzi o riprodurre questo documento, né utilizzare il contenuto o renderlo comunque noto a terzi senza autorizzazione esplicita. Chiunque violi questa norma è tenuto al risarcimento dei danni. Tutti i diritti riservati di tipo industriale, ad esempio in materia di brevetti o modelli.

Copying of this document and giving it to others and the use or communication of the contents thereof, are forbidden without express authority. Offenders are liable to the payment of damages. All rights are reserved in the event of the grant of patent or registration of a utility model or design. This document is the subject of copyright.