Max.rebound length: 478 +not specified -4 +4 -not specified

Min.compression length: 324 (S=154)

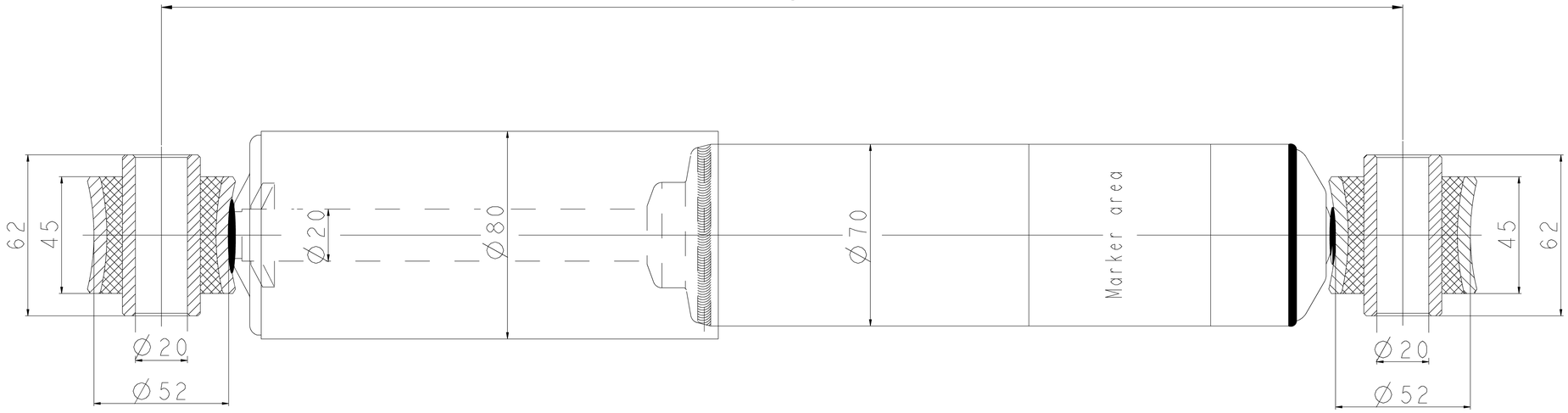

ADD damping force specification - Hydraulic

V(m/s)	0.079	0.157	0.314	0.520	0.750
Pf(N)	4976	7349	10570	13423	15786
Py(N)	2240	3293	5089	7156	8440
S(mm)	60		rebound(N)		

DESIGNED BY	CHECKED BY	APPROVED BY	DATE	FILE NAME	DATE	SCALE
Zhang shikai	Zhao chao	Gui dongming			06/02/2008	

ADD INDUSTRY CO., LTD.

SHOCK ABSORBER DRAWING

DRAWING NUMBER		
AHN70051	ADD NO.	186751
	WABCO NO.	438 601 069 0

Colour: RAL 9005B Semi-Black

General Specification: JED-334-0

Further Technical Data:

Doc. Code: Sheet: To

General Tolerances JED-261

Class 1)	< 50	> 50 < 180	> 180 < 400	> 400	
Fine	0.5	1.0	1.5	2.0	±3°
Medium X	1.0	2.0	3.0	4.0	
Coarse	2.0	3.5	5.0	6.5	

Range of Nominal Dimensions (± mm)

Tapped Holes acc.

1) Tolerance Class Applied Crossmarked

DCN-No.	Rev.	Date
117413	A	13-06-2008

State of Revision

Copyright WABCO ®

	Date	Signature
Drawn	2008-06-03	BASINSKI
Checked	2008-06-04	COUPPEE
Expert	HAIGH	

WABCO

SHOCK ABSORBER

Mass	Scale	Material No.	WABCO Id. No.: 438 601 069 0		
5.1 KG	1:1	438 601 069 0	Doc.Code 005	Language EN	Sheet 1/1
Size A 1	TRI 560		Function Code	CAD System Pro/E	Prod.Type

Replacement for

100mm

Toute Communication ou reproduction de ce document, toute exploitation ou communication de son contenu sont interdites, sauf autorisation expresse. Tous droits de propriété industrielle réservés, notamment en matière de brevets et de modèles.

Weitergabe sowie Vervielfältigung dieser Unterlage, Verwertung und Mitteilung ihres Inhalts nicht gestattet, soweit nicht ausdrücklich zugesichert. Alle Rechte für den Fall der Patenterteilung oder Eintragung von Gebrauchsmuster vorbehalten.

Non è permesso consegnare o farne o riprodurre questo documento, né utilizzarne il contenuto o renderlo comunque noto a terzi senza previa autorizzazione scritta. Tutti i diritti di proprietà industriale sono riservati, in particolare quelli di brevetto o di modello.

Copying of this document and giving it to others and the use or communication of the contents thereof, are forbidden without express authority. Offenders are liable to the payment of damages. All rights are reserved in the event of the grant of patent or registration of a utility model or design. This document is the subject of copyright.