Max.rebound length: 445 $^{+\text{not specified}}_{-4}$ $^{+4}_{-\text{not specified}}$

Min.compression length: 313 (S=132)

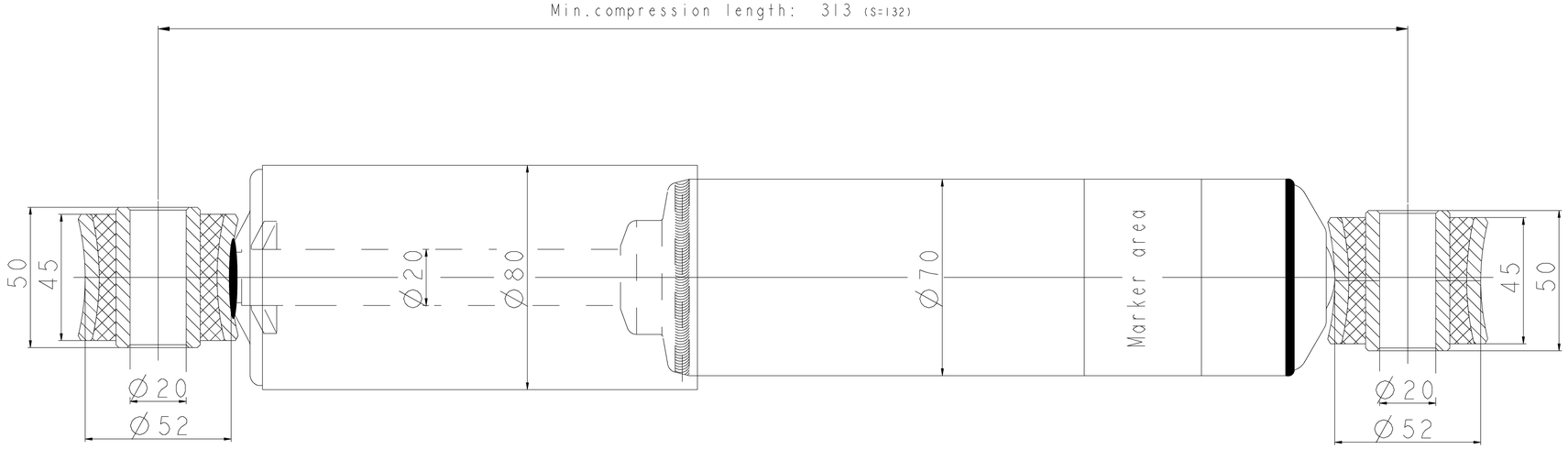

ADD damping force specification -hydraulic

V(m/s)	0.079	0.157	0.314	0.520	0.750
Pf(N)	3751	4808	6277	8046	10110
Py(N)	2160	2572	3178	3744	4226
S(mm)	60		rebound(N)		

DESIGNED BY	CHECKED BY	APPROVED BY DATE	FILE NAME	DATE	SCALE
Zhang shikai	Zhao chao	Gui dongming		06/02/2008	

ADD INDUSTRY CO., LTD.

SHOCK ABSORBER DRAWING

DRAWING NUMBER		
AHN70078	ADD NO.	186778
	WABCO NO.	438 601 071 0

Colour: RAL 9005B Semi-Black

General Specification: JED-334-0					
Further Technical Data:					
Doc. Code:			Sheet:		To
General Tolerances JED-261					
	Range of Nominal Dimensions (± mm)				
Class 1)	< 50	> 50 < 180	> 180 < 400	> 400	
Fine	0.5	1.0	1.5	2.0	±3°
Medium	1.0	2.0	3.0	4.0	
Coarse	2.0	3.5	5.0	6.5	
Tapped Holes acc.					
1) Tolerance Class Applied Crossmarked					

DCN-No.	Rev.	Date
117413	A	13-06-2008

State of Revision

Copyright WABCO ®

	Date	Signature
Drawn	2008-06-03	BASINSKI
Checked	2008-06-04	COUPPEE
Expert	HAIGH	

WABCO

SHOCK ABSORBER

Mass	Scale	Material No.	WABCO Id. No.: 438 601 071 0		
4.9 KG	1:1	438 601 071 0	Doc.Code 005	Language EN	Sheet 1/1
Size A 1	TRI 560		Function Code	CAD System Pro/E	Prod.Type
			Replacement for		

100mm

Toute Communication ou reproduction de ce document, toute exploitation ou communication de son contenu sont interdites, sauf autorisation expresse. Tous droits de propriété industrielle réservés, notamment en matière de brevets et de modèles.

Weitergabe sowie Vervielfältigung dieser Unterlage, Verwertung und Mitteilung ihres Inhalts nicht gestattet, soweit nicht ausdrücklich zugesichert. Alle Rechte für den Fall der Patenterteilung oder Eintragung von Gebrauchsmuster oder Geschmacksmuster vorbehalten.

Non è permesso consegnare o fare o riprodurre questo documento, né utilizzare il contenuto o renderlo comunque noto a terzi senza autorizzazione scritta. Ogni diritto di proprietà industriale è riservato, in particolare quello di brevetto o di registrazione di un modello.

Copying of this document and giving it to others and the use or communication of the contents thereof, are forbidden without express authority. All industrial property rights are reserved in the event of the grant of patent or registration of a utility model or design. This document is the subject of copyright.