Max.rebound length: 694 $^{+\text{not specified}}_{-4}$ $^{+4}_{-\text{not specified}}$

Min.compression length: 433 (S=261)

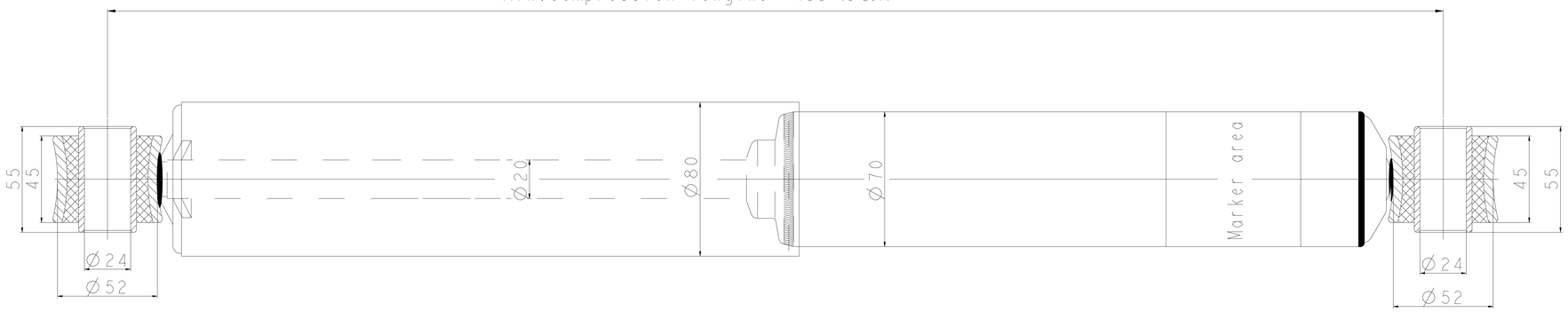

ADD damping force specification - hydraulic

V(m/s)	0.079	0.157	0.314	0.520	
Pf(N)	4746	6578	9485	11981	
Py(N)	1816	2616	3857	5423	
S(mm)	60		rebound(N)		

DESIGNED BY	CHECKED BY	APPROVED BY DATE	FILE NAME	DATE	SCALE
Zhang shikai	Zhao chao	Gui dongming		06/02/2008	

ADD INDUSTRY CO., LTD.

SHOCK ABSORBER DRAWING

DRAWING NUMBER		
AHN70046	ADD NO.	186746
	WABCO NO.	4386010720

Colour: RAL 9005B Semi-Black

General Specification: JED-334-0

Further Technical Data:

Doc. Code: Sheet: To

General Tolerances JED-261

Class 1)		Range of Nominal Dimensions (± mm)				
		< 50	> 50 < 180	> 180 < 400	> 400	
Fine		0.5	1.0	1.5	2.0	±3°
Medium	X	1.0	2.0	3.0	4.0	
Coarse		2.0	3.5	5.0	6.5	

Tapped Holes acc.

1) Tolerance Class Applied Crossmarked

DCN-No.	Rev.	Date
117413	A	13-06-2008

State of Revision

Copyright WABCO *

Date	Drawn	Signature
2008-06-03	BASINSKI	
Checked		
2008-06-04	COUPPEE	
Expert		
	HAUGH	

WABCO

SHOCK ABSORBER

Mass	Scale	Material No.	WABCO Id. No.: 438 601 072 0		
6 KG	1:1	438 601 072 0	Doc. Code: 005	Language: EN	Sheet: 1/1
Size	Title				
A 0	560		Function Code	CAD System	Prod. Type

Replacement for

100mm

Tale Documento la riproduzione ed il deposito, tale estensione su supporto per elettronica, nonché alcuni estratti ognuno. Tal documento è stato redatto con la massima cura. Non possiamo comunque garantire il contenuto e vogliate comunque dare a tale. Ein Dieses Dokument darf ohne ausdrückliche Genehmigung weder ganz oder teilweise kopiert oder Dritten zugänglich gemacht werden. Es wurde mit der gebotenen Sorgfalt erstellt. Wir können jedoch keine Gewährleistung für den Inhalt übernehmen. Copyright WABCO Copyright WABCO Copyright WABCO