Colour: RAL 9005B Semi-Black

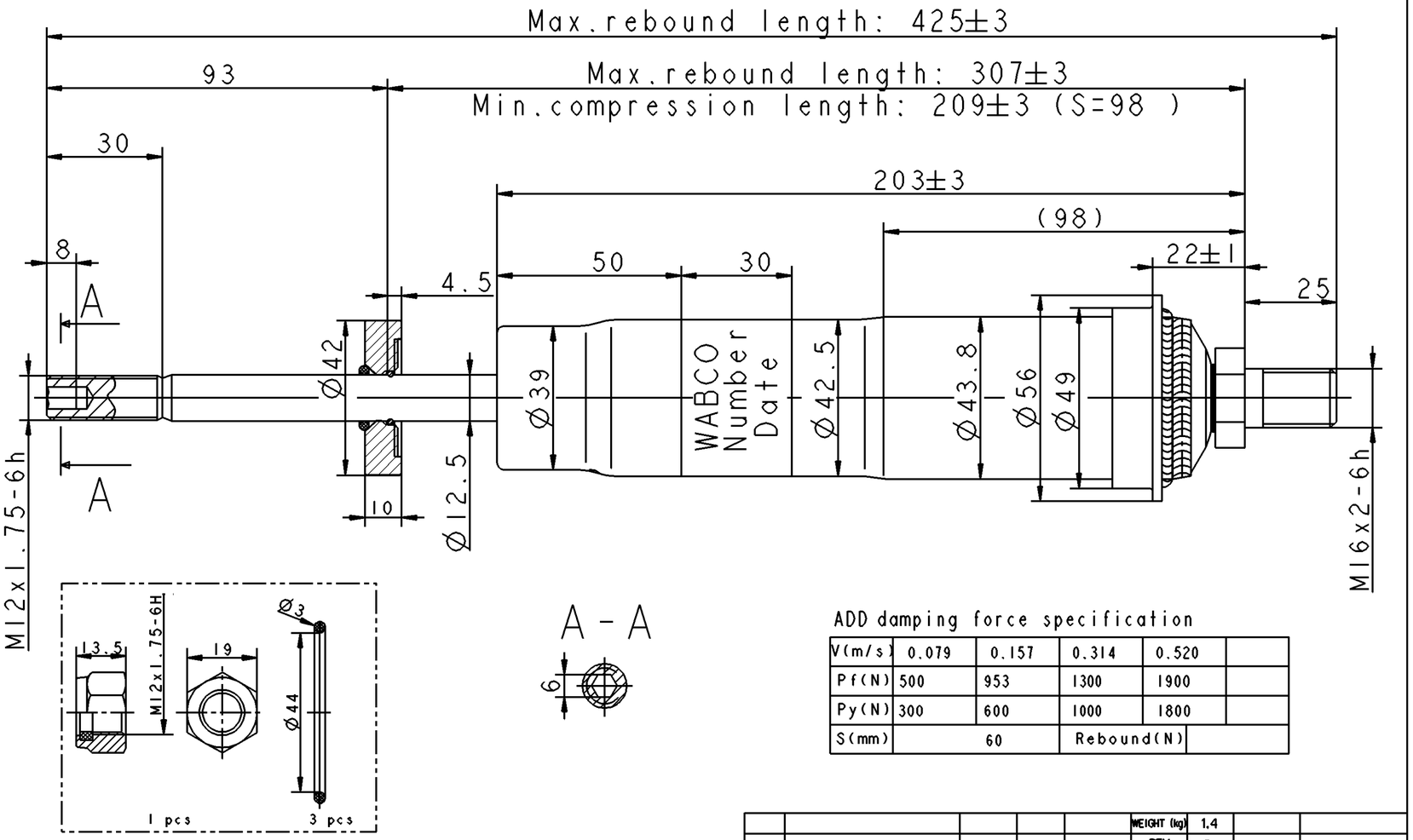

ADD damping force specification

V(m/s)	0.079	0.157	0.314	0.520	
Pf(N)	500	953	1300	1900	
Py(N)	300	600	1000	1800	
S(mm)	60		Rebound(N)		

LTR.	REVISIONS	CHK'D	E.C.O	DATE

SHOCK ABSORBER DRAWING

DRAWING	CHECKED	APPROVED	DATE
Bingrong Lin	Yingying Chen	Dongming Gui	08/05/2009

WEIGHT (kg)	1.4		
REV.	B		
SCALE	1:1	WABCO No.	4386041410
FIRST ANGLE PROJECTION		ADD No.	681013
		DRAWING No.	WHN30004

ADD INDUSTRY CO.,LTD

General Specification:	JED-334-0		
Further Technical Data:			
Doc. Code:		Sheet:	To

General Tolerances JED-261

Class 1)	≤ 50	> 50 ≤ 180	> 180 ≤ 400	> 400	∠
	Range of Nominal Dimensions (± mm)				
Fine	0.5	1.0	1.5	2.0	±3°
Medium	1.0	2.0	3.0	4.0	
Coarse	2.0	3.5	5.0	6.5	

Tapped Holes acc. JED-152

1) Tolerance Class Applied Crossmarked

Copyright WABCO®

	Date	Signature
Drawn	2009-09-03	Jasinski
Checked	2009-09-14	Hladik
Expert	B. Basinski	

WABCO

SHOCK ABSORBER
STOßDAMPFER
AMORTISSEUR
AMMORTIZZATORI

Mass	Scale	Material No.	Date of first issue: 2009-09-14		
1.400 KG	-	438 604 141 0	Doc.Code	Language	Sheet
			005	ML	1/1
Size	CAD System				
A 2	Pro/E				

ECN-No.	Revision	Techn. Resp.	Replacement for
121691		6961	

100mm

Non è permesso consegnare a terzi o riprodurre questo documento, ne utilizzarne il contenuto o renderlo comunque noto a terzi senza autorizzazione espressa. Ogni infrazione costituisce un reato che comporta il danno. Tutti i diritti riservati in caso di brevetto o modello.
L'Utilizzatore è tenuto a tutti i divieti derivanti da brevetto o modello.

Copying of this document and giving it to others and the use or communication of the contents thereof, are forbidden without express authority. Offenders are liable to the payment of damages. All rights are reserved in the event of the grant of patent or registration of a utility model or design. The document is the subject of copyright.

Toute Communication ou reproduction de ce document, toute exploitation ou communication de son contenu sont interdites, sauf autorisation expresse. Tout manquement à cette règle constitue un abus évident et expose son auteur au versement de dommages et intérêts. Tous droits de propriété industrielle réservés, notamment en matière de brevets et de modèles.

Weitergabe sowie Vervielfältigung dieser Unterlage, Verwertung und Mitteilung ihres Inhalts nicht gestattet, soweit nicht ausdrücklich zugesichert. Zuwiderhandlungen stellen einen offensichtlichen Missbrauch dar und verpflichten zu Schadenersatz. Alle Rechte für den Fall der Patenterteilung oder Gebrauchsmuster-Eintragung vorbehalten.

dwg: 4386041410_005 / Version: / state: / mdl: 4386041410_A02