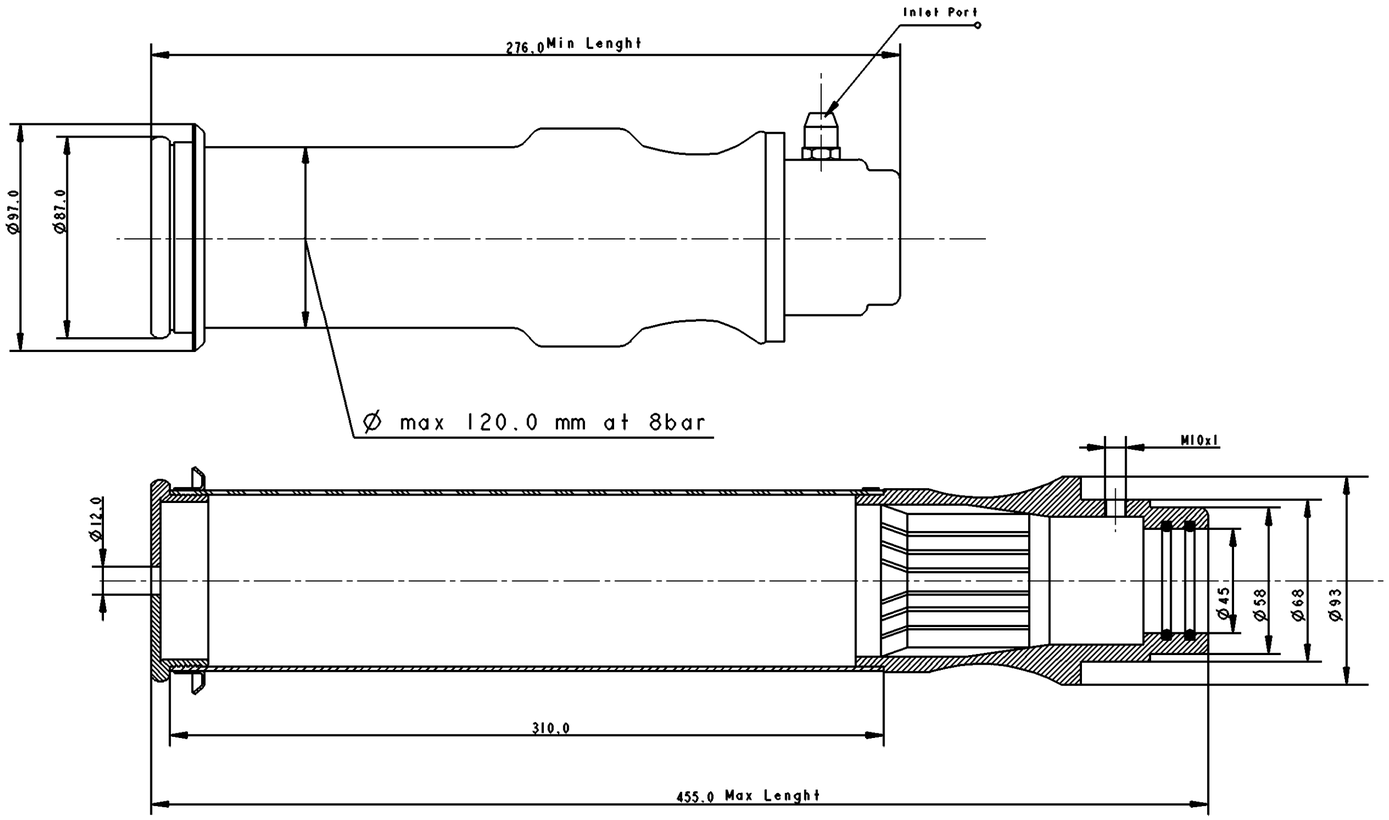

Indicative weight Kg 1.000

Ref. number: 438 604 196 0	Client: WABCO	Date	03/07/2009
	Application: -	Drawn from	
	Position: -	Approved from:	
		Signature:	
A3 CAD	Ref. original number:	File number	
Scale / Scale: 1:2		Draw number	
		General Tolerance	ISO 2768

Class 1)	Range of Nominal Dimensions (± mm) ≤ 50	> 50 ≤ 180	> 180 ≤ 400	> 400	∡
Fine	0.5	1.0	1.5	2.0	
Medium	1.0	2.0	3.0	4.0	±3°
Coarse	2.0	3.5	5.0	6.5	

General Specification: JED-334-0
Further Technical Data:
Doc. Code: Sheet: To
General Tolerances JED-261
Tapped Holes acc. JED-152
1) Tolerance Class Applied Crossmarked

Copyright WABCO®

Date	Signature
Drawn 2010-01-08	Jasinski
Checked 2010-01-08	Thies
Expert B. Basinski	

WABCO

SHOCK ABSORBER
STOßDAMPFER
AMORTISSEUR
AMMORTIZZATORI

Mass	Scale	Material No.	Date of first issue: 2010-01-08		
1.000 KG	-	438 604 196 0	Doc.Code 005	Language ML	Sheet 1/1
Size A 2	CAD System Pro/E	ECN-No. - / Revision / Techn. Resp. 6961	Replacement for		

100mm

Toute Communication ou reproduction de ce document, toute exploitation ou communication de son contenu sont interdites, sauf autorisation expresse. Tout manquement à cette règle constitue un délit et expose son auteur au versement de dommages et intérêts. Tous droits de propriété industrielle réservés, notamment en matière de brevets et de modèles.

Weitergabe sowie Vervielfältigung dieser Unterlage, Verwertung und Mitteilung ihres Inhalts nicht gestattet, soweit nicht ausdrücklich zugestanden. Zuwiderhandlungen stehen einer Schadenersatzpflicht Mißbrauch dar und verpflichten zu Schadensersatz. Alle Rechte für den Fall der Patenterteilung oder Gebrauchsmustereintragung vorbehalten.

Non è permessa consegnare a terzi o riprodurre questo documento, né utilizzarne il contenuto o renderlo comunque noto a terzi senza autorizzazione esplicita. Ogni violazione costituisce un illecito e comporterà il risarcimento dei danni subiti.

Copying of this document and giving it to others and the use or communication of the contents thereof, are forbidden without express authority. Offenders are liable to the payment of damages. All rights are reserved in the event of the grant of patent or registration of a utility model or design. This document is the subject of copyright.

drw: 438604196 0____005 / Version: -1 / status: Under Review / mdl: 438604196 0____A02