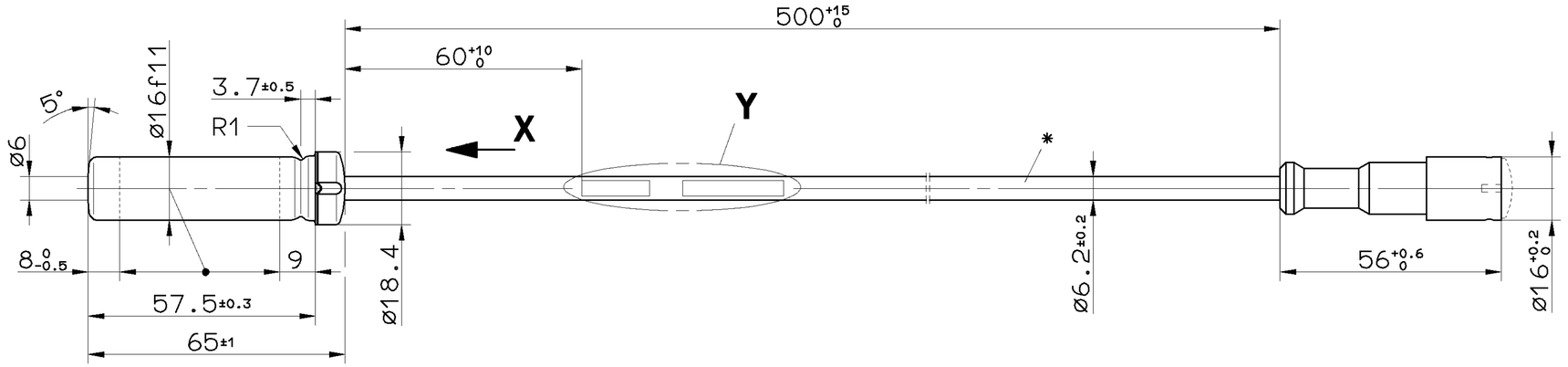


**X** 2:1

WEEK AND YEAR OF MANUFACTURE
FERTIGUNGSWOCHE UND JAHR **
SEMAINE ET ANNEE DE FABRICATION
SETTIMANA E ANNO DI FABBRICAZIONE

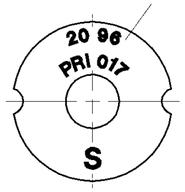


**Y** 2:1

PART NO.
TEILE-NR. **
NO.DE PIECE
CODICE

WABCO 441 032 476 0

* TWO CORE CABLE
LEITUNG ZWEIADRIG
CABLE A DEUX CONDUCTEURS
CAVO A DUE CONDUTORI
} THERMORAD 2×0.96mm²

BEND RADIUS CABLE
BIEGERADIUS KABEL
RAYON DE COURBURE DE CABLE
RAGGIO DI CURVATURA DEL CAVO
} R 15 MIN, ∢ 90°

STRAIN RELIEF CABLE
ZUGENTLASTUNG KABEL
ARRET DE CABLE
SCARICO DI TRAZIONE DEL CAVO
} MAX.50N ϑ=20° C

** ABRASION RESISTANT PRINT
ABRIEBFESTER AUFDRUCK
RESISTANTE A L'ABRASION
RESISTENTE ALL'ABRASIONE
} RAL 9001

THERMAL RANGE OF APPLICATION FOR SENSOR
THERMISCHER ANWENDUNGSBEREICH FUER SENSOR
GAMME D'APPLICATION THERMIQUE POUR CAPTEUR
CAMPO DI APPLICAZIONE TERMICA DEL SENSORE
} -40° C...+150° C
+180° C [1h]

THERMAL RANGE OF APPLICATION FOR CABLE
THERMISCHER ANWENDUNGSBEREICH FUER KABEL
GAMME D'APPLICATION THERMIQUE POUR CABLE
CAMPO DI APPLICAZIONE TERMICA DEL CAVO
} -40° C...+180° C
+220° C [1h]

THERMAL RANGE OF APPLICATION FOR CONNECTOR SOCKET
THERMISCHER ANWENDUNGSBEREICH FUER KUPPLUNGSDOSE
GAMME D'APPLICATION THERMIQUE POUR SOCLE DE PRISE
CAMPO DI APPLICAZIONE TERMICA DEL CONNETTORE
} -40° C...+80° C

FOR FURTHER TECHNICAL DATA SEE PRODUCT SPECIFICATION
WEITERE TECHNISCHE DATEN SIEHE PRODUKT SPEZIFIKATION
POUR AUTRES DONNEES TECHNIQUES VOIR PRODUCT SPECIFICATION
PER ULTERIORI DATI TECNICI VEDERE SPECIFICA DI PRODOTTO
} 441 032 576 0

INSTRUCTIONS OF INSTALLATION SEE ADAPTATION SPECIFICATION
EINBAUHINWEISE SIEHE ADAPTIONS-SPEZIFIKATION
INSTRUCTIONS D'INSTALLATION VOIR SPECIFICATION D'ADAPTION
ISIRUZIONI D'INSTALLAZIONE VEDERE SPECIFICA D'ADATTAMENTO
} 441 032 602 0
(CODE 602)

TYPE OF PROTECTION (IN CONNECTION WITH PLUG)
SCHUTZART (IN VERBINDUNG MIT STECKER)
MODE DE PROTECTION (DANS CONNECTION AVEC FICHE)
TIPO DI PROTEZIONE (NELLE INDUTTIVO CON SPINOTTO)
} IP 67/69 K
EN 60529/IEC 529

| | | | | | |
|---|---|---|---|---|---|
| GENERAL SPECIFICATION: JED-334 | | | | | |
| FURTHER TECHNICAL DATA: | | | | | |
| DOC. CODE: | | SHEET: TO | | | |
| GENERAL TOLERANCES | | | | | |
| CLASS 1) | RANGE OF NOMINAL DIMENSIONS ( ± mm ) ≤50 | >50 ≤180 | >180 ≤400 | >400 | ∢ |
| FINE | | 0,5 | 1,0 | 1,5 | 2,0 | |
| MEDIUM | | 1,0 | 2,0 | 3,0 | 4,0 | ± 3° |
| COARSE | × | 2,0 | 3,5 | 5,0 | 6,5 | |
| TAPPED HOLES ACC. ISO 4039 / JED-152 | | | | | |
| 1) TOLERANCE CLASS APPLIED CROSSMARKED | | | | | |

| DCN-NO. | REV. | DATE |
|---|---|---|
| | | |

CADAM-DRAWING COPYRIGHT

| DATE | SIGNATURE |
|---|---|
| DRAWN: 96-04-01 | HARNISCHM |
| CHECKED: 96-04-01 | HOEFLER |
| STANDARDIZATION: | |

**WABCO**

INDUCTIVE SENSOR WITH SOCKET
STABSENSOR MIT KUPPLUNGSDOSE
CAPTEUR AVEC SOCLE DE PRISE
SENSORE INDUTTIVO CON CONNETTORE

| MASS | SCALE | PRODUCT IDENTIFICATION NO. | DOC. CODE | SHEET |
|---|---|---|---|---|
| 0.150 KG | 1:1 (2:1) | 441 032 476 0 | 605 | 1/1 |
| SIZE A 2 | T.R.I. 141 | | SHAPE CODE | REPLACEMENT FOR |

100mm

EXPERT CODE 7 6 0

PRODUCT TYPE 2 1 X

605/453

1809/012/2/04.93

TOUTE COMMUNICATION OU REPRODUCTION DE CE DOCUMENT, TOUTE EXPLOITATION OU COMMUNICATION DE SON CONTENU OU RENSEIGNEMENT EN DONNANT LE TITRE, SERA JUGEE DOMMAGEABLE ET OUVRIRA DROIT A DES DOMMAGES-INTERETS. TOUS DROITS DE PROPRIETE INDUSTRIELLE RESERVES. NOTAMMENT EN MATIERE DE BREVETS ET DE MODELES.
NON E PERMESSO CONSEGNARE A TERZI O RIPRODURRE QUESTO DOCUMENTO, NE UTILIZZARNE IL CONTENUTO O RENDERNE ESPLICITO IL TITOLO, CHE SARANNO RITENUTI LESIVI. SI RISARCIRANNO I DANNI. TUTTI I DIRITTI DI PROPRIETA' INDUSTRIALE SONO RISERVATI, SOPRATTUTTO PER LA RISARCIBILITA' DI BREVETTI O MODELLI.
WEITERGABE SOWIE VERVIELFAELTIGUNG DIESER UNTERLAGE, VERWENDUNG UND MITTEILUNG ZIMPEN INHALTS NICHT GESTATTET, SOWEIT NICHT AUSDRUECKLICH ZUGESTANDEN. ZUWIDERHANDLUNGEN VERPFLICHTEN ZU SCHADENSERSATZ. ALLE RECHTE FUER DEN FALL DER PATENTERTEILUNG ODER GEBRAUCHSMUSTER-EINTRAGUNG VORBEHALTEN.
COPYING OF THIS DOCUMENT AND GIVING IT TO OTHERS AND THE USE OR COMMUNICATION OF THE CONTENTS THEREOF, ARE FORBIDDEN UNLESS EXPRESSLY AUTHORIZED. OFFENDERS ARE LIABLE TO PAY DAMAGES. ALL RIGHTS ARE RESERVED IN THE EVENT OF THE GRANT OF PATENT OR REGISTRATION OF A UTILITY MODEL OR DESIGN. THIS DOCUMENT IS THE SUBJECT OF COPYRIGHT.