| <CI> CUSTOMER INTERFACE | 0 |
|---|---|
| Ø16f11 | -0.016 / -0.126 |

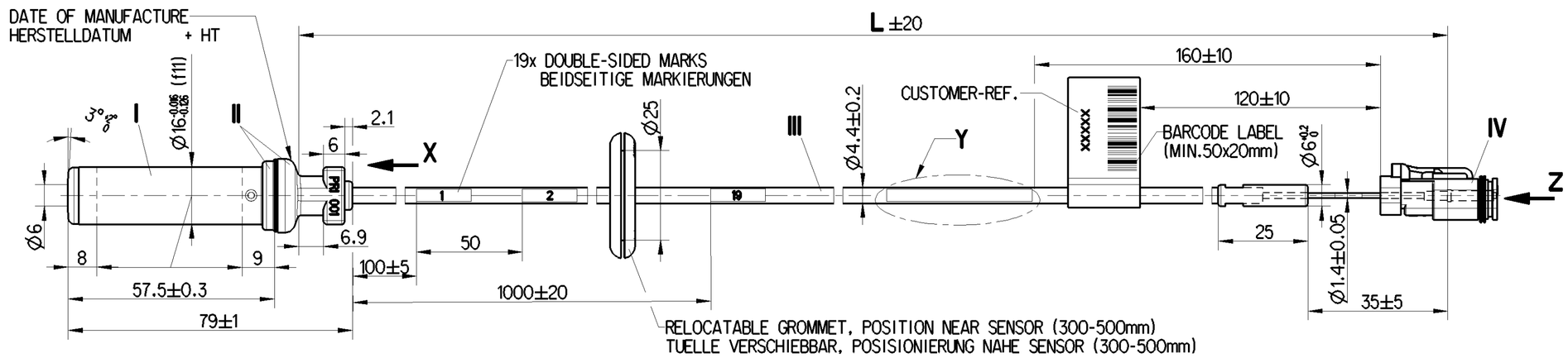


Y
2:1

**MADE IN GERMANY**

STAMP PART NO
AUFDRUCK TEILE NR.

**WABCO 441 035 3. . 0**

X
2:1

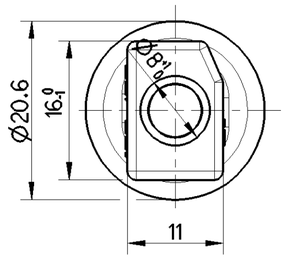


Z

CODE A — GREY GRAU

CODE B — BLACK SCHWARZ

CODE C — GREEN GRUEN

CODE D — BROWN BRAUN

| WABCO-NO. CUSTOMER-REF. | L (mm) | DEUTSCH CONNECTOR | MASS [kg] |
|---|---|---|---|
| 441 035 311 0 / 21663560 | 2000 | CODE B | 0.101 |
| 441 035 312 0 / 21663556 | 2200 | CODE A | 0.106 |
| 441 035 313 0 / 21663558 | 3000 | CODE A | 0.127 |
| 441 035 314 0 / 21663561 | 2600 | CODE B | 0.117 |
| 441 035 315 0 / 21663564 | 1900 | CODE C | 0.099 |
| 441 035 316 0 / 21663566 | 2000 | CODE D | 0.101 |
| 441 035 317 0 / 21663557 | 2650 | CODE A | 0.118 |
| 441 035 318 0 / 21663559 | 3600 | CODE A | 0.142 |
| 441 035 319 0 / 21663563 | 3600 | CODE B | 0.142 |
| 441 035 334 0 / 21663562 | 3100 | CODE B | 0.129 |
| 441 035 335 0 / 21663567 | 3150 | CODE D | 0.130 |
| 441 035 336 0 / 21663565 | 3250 | CODE C | 0.133 |

| MATERIAL *WERKSTOFF* | |
|---|---|
| SENSOR BODY *SENSORGEHAEUSE* | STAINLESS STEEL |
| SENSOR HEAD *SENSORKOPF* | POLYAMIDE |
| SENSOR CABLE *SENSORKABEL* | 2x0.5mm² © CROSS LINKED POLYMER JACKET FULFILLS UN/ECE R118 |
| DEUTSCH CONNECTOR *DEUTSCH STECKER* | POLYAMIDE |
| CONTACT *KONTAKT* | SIZE 16 Cu ALLOY / Ni COATED |

THERMAL RANGE OF APPLICATION
THERMISCHER ANWENDUNGSBEREICH

- **I** -40°C...+200°C[1000h] +210°C[1h]
- **II** -40°C...+150°C +180°C[1h]
- **III** -40°C...+180°C +220°C[1h]
- **IV** -40°C...+125°C

STRAIN RELIEF CABLE
ZUGENTLASTUNG KABEL — MAX.50N ϑ=20°C

BEND RADIUS CABLE
BIEGERADIUS KABEL — R 15 MIN. ∢ 90°

DEGREE OF PROTECTION
SCHUTZART — IP 6K8 ISO 20653

FURTHER TECHNICAL DATA SEE PRODUCT SPECIFICATION
WEITERE TECHNISCHE DATEN SIEHE PRODUKT SPEZIFIKATION — 441 032 390 0

INSTRUCTIONS OF INSTALLATION SEE ADAPTATION SPECIFICATION
EINBAUHINWEISE SIEHE ADAPTIONS-SPEZIFIKATION — 441 032 100 0

1:1

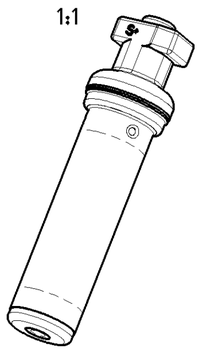

CONNECTOR SYSTEM ACCORDING TO CUSTOMER SPECIFICATION. WABCO DOES NOT PROVIDE ANY WARRANTY RELATING TO CONNECTOR-SYSTEM DEFECTS
STECKSYSTEM NACH KUNDENANGABEN. FUER MAENGEL AM STECKSYSTEM KEINE GEWAEHRLEISTUNG DURCH WABCO

General Specification: ISO 8015, JED-334-1, Size ISO 14405 LP
Further Technical Data:
Doc. Code: Sheet: To

General Tolerances JED-261

| Class 1) | Range of Nominal Dimensions ( ± mm) ≤ 50 | > 50 ≤ 180 | > 180 ≤ 400 | > 400 | ∢ |
|---|---|---|---|---|---|
| Fine | 0.5 | 1.0 | 1.5 | 2.0 | ±3° |
| Medium | 1.0 | 2.0 | 3.0 | 4.0 | |
| Coarse X | 2.0 | 3.5 | 5.0 | 6.5 | |

Tapped Holes acc.
1) Tolerance Class Applied Crossmarked

Copyright WABCO®

| | Date | Signature |
|---|---|---|
| Drawn | 2021-12-16 | Harnischmacher |
| Checked | 2021-12-17 | Nieber |

Dimensions in mm

**WABCO**

INDUCTIVE SENSOR WITH PLUG
STABSENSOR MIT STECKER

| Mass | Scale | Material No. | Date of first issue: 2009-06-17 |
|---|---|---|---|
| / KG | 1:1 2:1 | 441 035 310 0 | Doc.Code 053 · Language ML · Sheet 1/1 |
| Size A 2 | CAD System CREO | ECN-No. 510015 · Revision 1x C · Techn. Resp. 6310_WSS · Replacement for | |

100mm

Tutte Comunicazioni o riproduzione di questo documento, nè utilizzarne il contenuto o renderlo comunque noto a terzi senza autorizzazione esplicita. Ogni infrazione costituirà un evidente abuso e comporterà il risarcimento dei danni subiti. E'fatta riserva di tutti i diritti derivanti da brevetti o modelli.

Non e permesso consegnare o terzi o riprodurre questo documento, ne utilizzarne il contenuto o renderlo comunque noto a terzi senza autorizzazione esplicita. Ogni infrazione costituirà un evidente abuso e comporterà il risarcimento dei danni subiti. E'fatta riserva di tutti i diritti derivanti da brevetti o modelli.

Toute Communication ou reproduction de ce document, toute exploitation ou communication de son contenu sont interdites, sauf autorisation expresse. Tout manquement à cette règle constitue un délit. Ainsi et expose son auteur au versement de dommages et interêts. Tous droits de propriété industrielle réservés, notamment en matière de brevets et de modèles.

Weitergabe sowie Vervielfältigung dieser Unterlage, Verwertung und Mitteilung ihres Inhalts nicht gestattet, soweit nicht ausdrücklich zugestanden. Zuwiderhandlungen stellen einen offensichtlichen Missbrauch dar und verpflichten zu Schadensersatz. Alle Rechte fuer den Fall der Patenterteilung oder Gebrauchsmuster-Eintragung vorbehalten.

Copying of this document and giving it to others and the use or communication of the contents thereof, are forbidden without express authority. Contravention of this restriction will constitute an evident abuse and result in a liability to the payment of damages. All rights are reserved in the event of the grant of patent or registration of a utility model or design. This document is the subject of copyright.