MEASURING PRINCIPLE: PIEZO-RESISTIVE
MESSPRINZIP : PIEZORESISTIV
PUINCIPE DE MESURE : PIEZORESISTIF
PRINCIPO DI MISURA : PIEZORESISTIVO

SUPPLY VOLTAGE
SPEISESPANNUNG
TENSION D'ALIMENTATION
TENSIONE D'ALIMENTAZIONE
5 V DC ±10%

CURRENT CONSUMPTION
STROMAUFNAHME
CONSOMMATION DE COURANT
ASSORBIMENTO DI CORRENTE
MAX. 20mA

THERMAL RANGE OF APPLICATION
THERMISCHER ANWENDUNGSBEREICH
PLAGE DE TEMPERATURE EN UTILISATION
CAMPO TERMICO DI APPLICAZIONE
-40°C...+80°C

MEASURING RANGE: 0-12 bar RELATIVE PRESSURE
MESSBEREICH : 0-12 bar RELATIVDRUCK
ZONE DE MESURE : 0-12 bar PRESSION RELATIVE
CAMPO DI MISURA: 0-12 bar PRESSIONE RELATIVA

ADMISSIBLE OVERPRESSURE
ZULAESSIGER UEBERDRUCK
ADMISSIBLE SURPRESSION
AMMISSIBLE SOVRAPRESSIONE
16 bar

POSITION OF INSTALLATION: OPTIONAL
EINBAULAGE : BELIEBIG
POSITION D'INSTALLATION : AU CHOIX
POSIZIONE DI MONTAGGIO : A PIACERE

** DIMENSION
ABMESSUNG
DIMENSION
DIMENSIONE
DIN 72 585

OFFSET
OFFSET
DEPLACEMENT DE VALEURS
DIFFERIMENTO DEL VALORI DI MISURA
1 V

SENSITIVITY
EMPFINDLICHKEIT
SENSIBILITE
SENSIBILITA
250 mV / bar

LINEARETY
LINEARITAET
LINEARITE
LINEARITA
≤±0.3%FS

HYSTERESIS
HYSTERESE
HYSTERESIS
ISTERESI
≤ 0.2%FS

***** IN THIS AREA PRI NO. AND DATE OF MANUFACTURE STAMPED.LETTERING 2mm HIGH 0.5mm DEEP
IN DIESEM BEREICH PRI-NR. UND HERSTELLDATUM GEPRAEGT.SCHRIFT 2mm HOCH 0,5mm TIEF
DANS CETTE ZONE NUMERO PRI ET DATE DE FABRICATION FRAPPES.ECRITURE 2mm ELEVEE 0,5mm PROFONDE
IN QUESTA ZONA NUMERO PRI E DATA DI FABBRICAZIONE IMPRESSI.CARATTERI 2mm ALTI 0,5mm PROFONDI.

****** NAMEPLATE ACCORDING TO JED-341 PERMISSIBLE
TYPENSCHILD NACH JED-341 ZULAESSIG
PLAQUE DE FIRME SUIVANT JED-341 ADMISE
TARGHETTA SECONDO JED-341 AMMESSA

*** THE CONNECTION TO ATMOSPHERE MUST LEAD THROUGH WATER-TIGHT CABLING TO A PROTECTED AREA (E.G. IN DRIVERS CAB).
DIE VERBINDUNG ZUR ATMOSPHAERE MUSS UEBER EINE WASSERDICHTE VERKABELUNG ZU EINEM GESCHUETZTEN ORT FUEHREN (Z.B. IM FAHRERHAUS).
LE CONNEXION A L'ATMOSPHERE DOIT PASSER PAR UN CABLAGE ETANCHE A L'EAU A UNE ZONE PROTEGEE (PAR EXAMPLE: LA CABINE DU CONDUCTEUR).
LA CONNESSIONE ALL'ATMOSFERA DEVE PASSARE ATTRAVERSO UN CABLEGGIO STANGO IN UNA ZONA PROTETTA (COME LA CABINA DEL CONDUCENTE).

**** O-RING : (NOT SUPPLIED)
O-RING : (GEHOERT NICHT ZUM LIEFERUMFANG)
JOINT TORIQUE : 8.9±0.17 x 1.9±0.08 (NON FUORNI)
O-RING : (NON SI FORNISCONO)

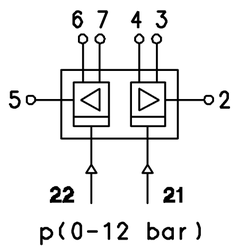

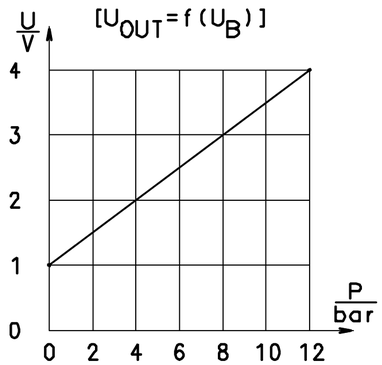

* ≙ COMPLEMENT WITH CONTACTS
KONTAKTBELEGUNG
EQUIPEMENT DE CONTACTS
APPLICAZIONE DEI CONTATTI

CIRCUIT KREIS CIRCUIT CIRCUITI	21		CIRCUIT KREIS CIRCUIT CIRCUITI	22	
2	3	4	5	6	7 *)
OUTPUT AUSGANG SORTIE USCITA	+5 VDC	0 V	OUTPUT AUSGANG SORTIE USCITA	+5 VDC	0 V

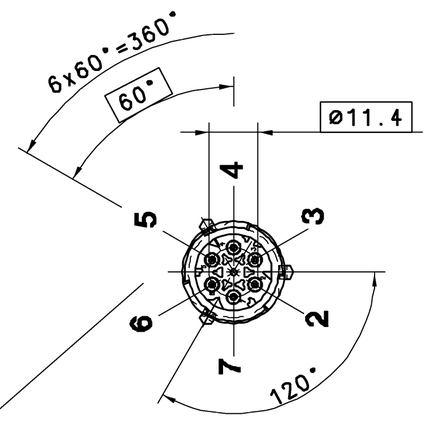

SEE AMP-DRAWING
SIEHE AMP-ZEICHNUNG 92-52080-100
VOIR AMP-DESSIN
VEDERE AMP-DISEGNO

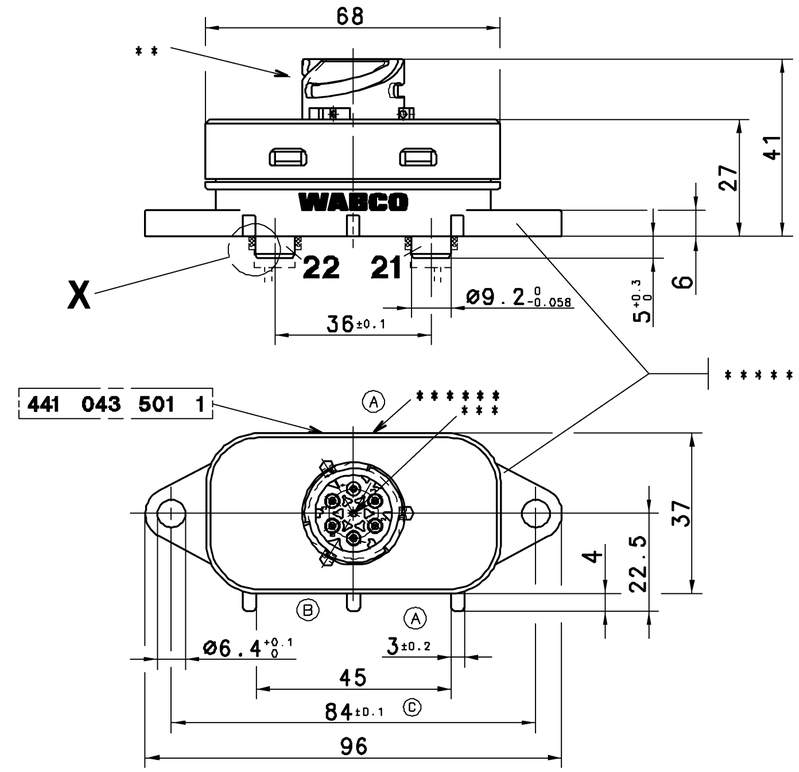

X 2:1

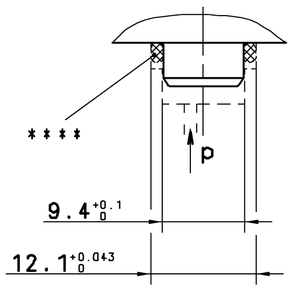

GENERAL SPECIFICATION: JED-334					
FURTHER TECHNICAL DATA:					
DOC. CODE:	SHEET: 10				
GENERAL TOLERANCES					
CLASS 1)	RANGE OF NOMINAL DIMENSIONS (± mm) ≤50	>50 ≤180	>180 ≤400	>400	∢
FINE	0,5	1,0	1,5	2,0	± 3°
MEDIUM	1,0	2,0	3,0	4,0	
COARSE	2,0	3,5	5,0	6,5	
TAPPED HOLES ACC. ISO 4039 / JED-152					
1) TOLERANCE CLASS APPLIED CROSSMARKED					

DGN-NO.	REV.	DATE
093927	1xC	04-12-14
074413	1xB	00-06-26
052583	2xA	98-03-18

100mm

CADAM-DRAWING COPYRIGHT
DATE SIGNATURE
DRAWN: 96-11-05 PFENNIG
CHECKED: 96-11-05 THIMM
STANDARDIZATION:

WABCO

PRESSURE SENSOR UNIT
DRUCKSENSOR-EINHEIT
UNITE DE CAPTEUR DE PRESSION
UNITA DI SENSORE DI PRESSIONE

MASS	SCALE	PRODUCT IDENTIFICATION NO.	DOC. CODE	SHEET
0.140 KG	1:1 (2:1)	441 043 501 1	605	1/1
SIZE A 2	T.R.I. 142	SHAPE CODE	REPLACEMENT FOR 934 705 501 1	

EXPERT CODE 7 7 1
PRODUCT TYPE

TOUTE COMMUNICATION OU REPRODUCTION DE CE DOCUMENT, TOUTE EXPLOITATION OU COMMUNICATION DE SON CONTENU NON E PERMESSO CONSEGNARE A TERZI O RIPRODURRE QUESTO DOCUMENTO, NE UTILIZZARNE IL CONTENUTO O RENDERLO NOTO A TERZI SENZA AUTORIZZAZIONE SCRITTA. LA VIOLAZIONE COMPORTA IL RISARCIMENTO DEI DANNI. TUTTI I DIRITTI DERIVANTI DA EV DONT ETRE EXPOSES SANS AUTORISATION ECRITE A DES TIERS A DES FINS DE DOMMAGES ET INTERETS. TOUS DROITS DE PROPRIETE INDUSTRIELLE RESERVES, NOTAMMENT EN MATIERE DE BREVETS ET DE MODELES.
ABASO E COMPORTERÀ IL RISARCIMENTO DEI DANNI. TUTTI I DIRITTI DERIVANTI DA BREVETTI O MODELLI.
WEITERGABE SOWIE VERVIELFAELTIGUNG DIESER UNTERLAGE, VERWERTUNG UND MITTEILUNG IHRES INHALTS NICHT GESTATTET SOWEIT NICHT AUSDRUECKLICH ZUGESTANDEN. ZUWIDERHANDLUNGEN VERPFLICHTEN ZUM SCHADENSERSATZ. ALLE RECHTE FUER DEN FALL DER PATENTERTEILUNG ODER GEBRAUCHSMASTER-EINTRAGUNG VORBEHALTEN.
COPYING OF THIS DOCUMENT, GIVING IT TO OTHERS AND THE USE OR COMMUNICATION OF THE CONTENTS THEREOF, ARE FORBIDDEN WITHOUT EXPRESS AUTHORITY. OFFENDERS ARE LIABLE TO THE PAYMENT OF DAMAGES. ALL RIGHTS ARE RESERVED IN THE EVENT OF THE GRANT OF PATENT OR REGISTRATION OF A UTILITY MODEL OR DESIGN. THIS DOCUMENT IS THE SUBJECT OF COPYRIGHT.

1008/012/3/04.93
805/653