TORQUE IN CONJUNCTION WITH CABLE
ANZUGSMOMENT IN VERBINDUNG MIT KABEL
COUPLE DE SERRAGE EN LIAISON AVEC CABLE
COPPIA DI SERRAGGIO IN COLLEGAMENTO CON CAVO
$M_A = 3^{+0.5}_{0}$ Nm

TORQUE
ANZUGSMOMENT
COUPLE DE SERRAGE
COPPIA DI SERRAGGIO
$M_A = 10^{+2}_{0}$ Nm

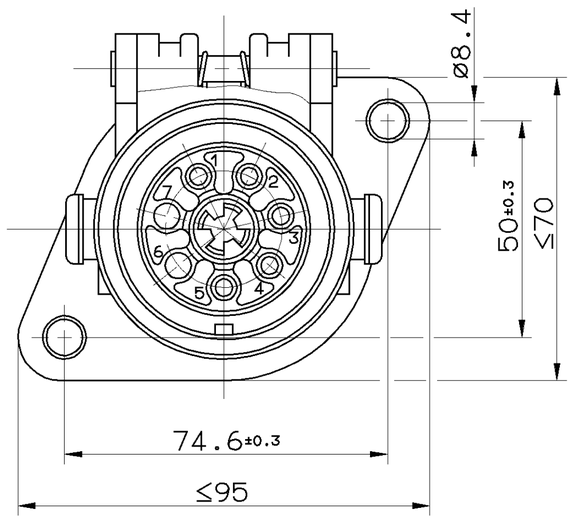

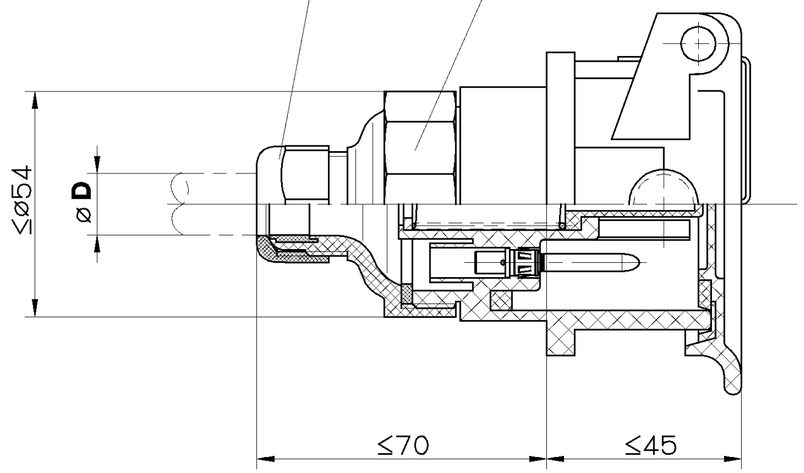

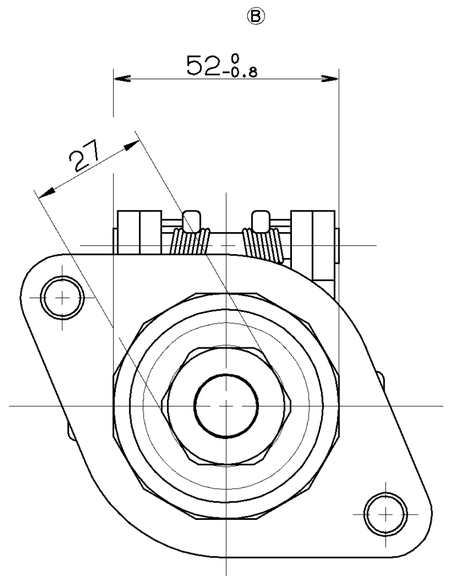

SOCKET FITTED BY THE CUSTOMER
STECKDOSE WIRD VOM KUNDEN MONTIERT
PRISE DE COURANT MONTE PAR LE CLIENT
PRESA DI CORRENTE MONTATO PER MEZZO DAL CLIENTE

VOLTAGE
SPANNUNG
VOLTAGE 24 V
VOLTAGGIO

MATING PART
GEGENSTUECK ISO 7638
PENDANT
ACCOPPIAMENTO

THERMAL RANGE OF APPLICATION
THERMISCHER ANWENDUNGSBEREICH -40°C...+110°C
PLAGE D'APPLICATION THERMIQUE
CAMPO D'APPLICAZIONE TERMICA

CONTAKTS : CROSS SECTION KONTAKTE : QUERSCHNITT CONTACTS : SECTION DE TRANSVERSALE CONTATTI : SEZIONE TRASVERSALE			FOR CABLE : FUER KABEL : POUR CABLE : PER CAVO :	PURCHASE IDENTIFICATION BESTELLBEZEICHNUNG DENOMINATION DE COMMANDE IDENTIFICAZIONE PER L'ORDINAZIONE
2× 6mm²	AND UND ET E	3× 1.5mm²	**D** = ø7....ø12	***446 008 383 2***
2× 6mm²	AND UND ET E	3× 1.5mm²	**D** = ø10...ø14	***446 008 381 2***
2× 4mm²	AND UND ET E	3× 1.5mm²	**D** = ø7....ø12	***446 008 380 2***
2× 4mm²	AND UND ET E	3× 1.5mm²	**D** = ø10...ø14	***446 008 384 2***

GENERAL SPECIFICATION: JED-334
FURTHER TECHNICAL DATA: ISO 7638
DOC. CODE: SHEET: TO

GENERAL TOLERANCES

CLASS 1)	RANGE OF NOMINAL DIMENSIONS (± mm) ≤50	>50 ≤180	>180 ≤400	>400	∢
FINE	0,5	1,0	1,5	2,0	± 3°
MEDIUM ☒	1,0	2,0	3,0	4,0	
COARSE	2,0	3,5	5,0	6,5	

TAPPED HOLES ACC. ISO 4039 / JED-152
1) TOLERANCE CLASS APPLIED CROSSMARKED

DCN-NO.	REV.	DATE
062732	1×B	97-05-22
054891	2×A	94-10-04

100mm

CADAM-DRAWING COPYRIGHT

	DATE	SIGNATURE
DRAWN:	93-08-03	WEBER
CHECKED:	93-08-03	SCHMIDT
STANDARDIZATION:	93-08-03	PANTZER

WABCO

ABS-SOCKET
ABS-STECKDOSE
ABS-PRISE DE COURANT
ABS-PRESA DI CORRENTE

MASS	SCALE	PRODUCT IDENTIFICATION NO.	DOC. CODE	SHEET
0.22 KG	1:1	446 008 382 2	653	1/1
SIZE	T.R.I.		SHAPE CODE	REPLACEMENT FOR
A 2	142			

EXPERT CODE 7 7 4
PRODUCT TYPE 0 2 ☒

1809/012/3/04.93
605/653

TOUTE COMMUNICATION OU REPRODUCTION DE CE DOCUMENT, TOUTE EXPLOITATION OU COMMUNICATION DE SON CONTENU SONT INTERDITES SAUF AUTORISATION EXPRESSE. LES DROITS DE PROPRIETE INDUSTRIELLE RESERVES, NOTAMMENT EN MATIERE DE BREVETS ET DE MODELES.

MEITERGABE SOWIE VERVIELFAELTIGUNG DIESER UNTERLAGE, VERWERTUNG UND MITTEILUNG IHRES INHALTS NICHT GESTATTET SOWEIT NICHT AUSDRUECKLICH GESTATTET. ZUWIDERHANDLUNGEN VERPFLICHTEN ZUM SCHADENSERSATZ. ALLE RECHTE FUER DEN FALL DER PATENTERTEILUNG ODER GERAUCHSMUSTER-EINTRAGUNG VORBEHALTEN.

NON E PERMESSO CONSEGNARE A TERZI O RIPRODURRE QUESTO DOCUMENTO, NE UTILIZZARNE IL CONTENUTO O RENDERNE COMUNICARE IL CONTENUTO, SALVO AUTORIZZAZIONE ESPRESSA. LE COPIE NON AUTORIZZATE OBBLIGANO AL RISARCIMENTO DEI DANNI. SI RISERVANO I DIRITTI DERIVANTI DA BREVETTI O MODELLI.

COPYING OF THIS DOCUMENT AND GIVING IT TO OTHERS AND THE USE OR COMMUNICATION OF THE CONTENTS THEREOF, ARE FORBIDDEN WITHOUT EXPRESS AUTHORITY. OFFENDERS ARE LIABLE TO PAY FOR DAMAGES. ALL RIGHTS ARE RESERVED IN THE EVENT OF THE GRANT OF PATENT OR REGISTRATION OF A UTILITY MODEL OR DESIGN. THIS DOCUMENT IS THE SUBJECT OF COPYRIGHT.