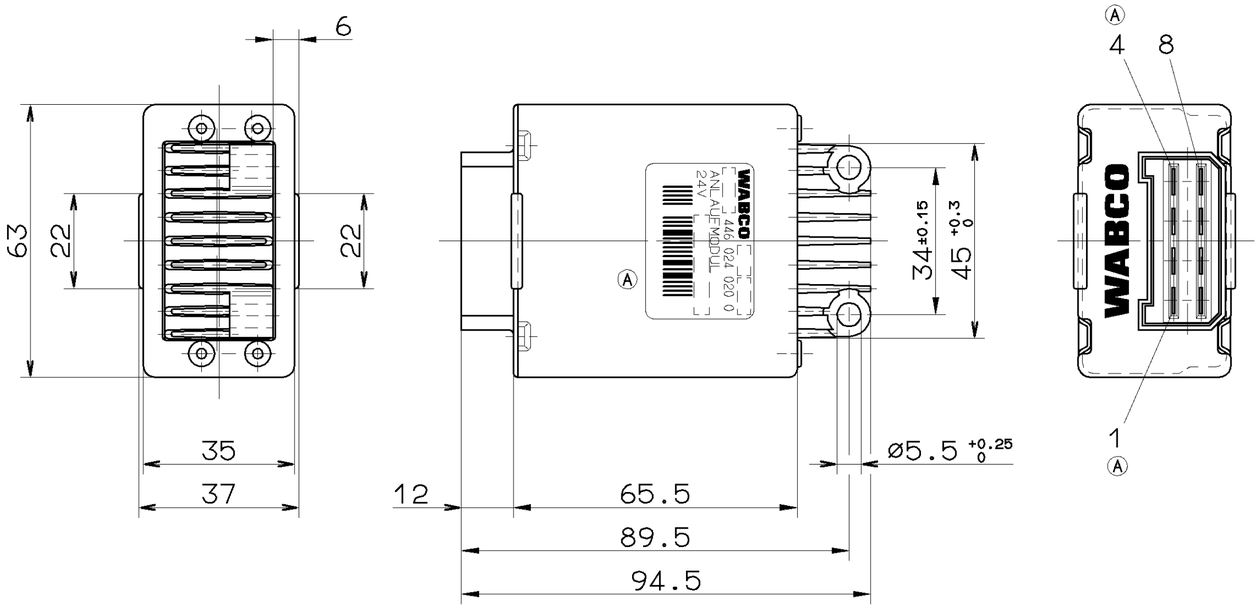

VOLTAGE :
SPANNUNG : 24V±25%
VOLTAGE :
VOLTAGGIO :

THERMAL RANGE OF APPLICATION :
THERM. ANWENDUNGSBEREICH : -40° ...+65° C
GAMME D' APPLICATION THERMIQUE:
CAMPO DI APPLICAZIONE THERMICA:

STORAGE TEMPERATURE FROM :
LAGERTEMPERATUR VON : -40° C...+90° C
TEMPERATURE DE MAGASINAGE DE :
TEMPERATURA DELL' IMMAGAZZIMENTO DA:

PROTECT TYPE :
SCHUTZART : IP 30 (DIN 40050)
MODE DE PROTECTION: (BLATT 9)
MODO DI PROTEZIONE:

CONTACT:
KONTAKTE: 1 ÷ 8 DIN A 46244
CONTACT:
CONTATTO:

CONTACT - SURFACE PROTECTION: TINNED
KONTAKTE - OBERFLAECHENSCHUTZ: VERZINNT
CONTACT - PROTECTION DE SURFACE: ETA'ME'
CONTATTO - PROTEZIONE SUPERFICIALE: STAGNATO

REQUIRED FEMALE CONNECTOR WITH HOUSING: SEE PRODUCT SPECIFICATION
ERFORDERLICHE FEDERLEISTE MIT GEHAEUSE: SIEHE PRODUKT-SPEZIFIKATION
CONNECTEUR FEMELLE REQUIS AVEC BOITIER: VOIR PRODUCT SPECIFICATION
NECESSARIO CONNECTORE FEMMINA CON CASA: VEDERE SPECIFICA DI PRODOTTO

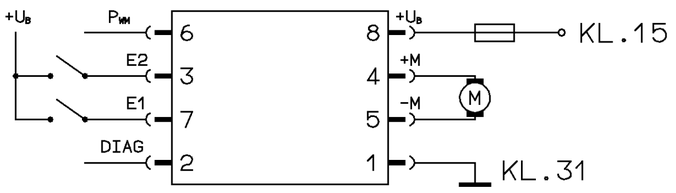

GENERAL SPECIFICATION: JED-334					
FURTHER TECHNICAL DATA:					
DOC. CODE:	SHEET: TO				
GENERAL TOLERANCES					
CLASS 1)	RANGE OF NOMINAL DIMENSIONS (± mm) ≤50	> 50 ≤180	>180 ≤400	>400	
FINE	0,5	1,0	1,5	2,0	± 3°
MEDIUM X	1,0	2,0	3,0	4,0	
COARSE	2,0	3,5	5,0	6,5	
TAPPED HOLES ACC. ISO 4039 / JED-152					
1) TOLERANCE CLASS APPLIED CROSSMARKED					

DCN-NO.	REV.	DATE
049677	3× A	92-01-15

CADAM-DRAWING COPYRIGHT

DATE	SIGNATURE
DRAWN: 90-11-16	A. SCHULZ
CHECKED: 90-11-16	KUNTZE/GU.
STANDARDIZATION: 91-02-27	PANTZER

WABCO

START UP MODUL
ANLAUFMODUL

MASS	SCALE	PRODUCT IDENTIFICATION NO.	DOC. CODE	SHEET
0.09 KG	1:1	446 024 020 0	605	1/1
SIZE	T.R.I.	SHAPE CODE	REPLACEMENT FOR	
A 2	142			

100mm

EXPERT CODE 7 8 8

PRODUCT TYPE 0 0

605/653 1809/012/3/04.93

TOUTE COMMUNICATION OU REPRODUCTION DE CE DOCUMENT, TOUTE EXPLOITATION OU COMMUNICATION DE SON CONTENU SONT INTERDITES, SAUF AUTORISATION EXPRESSE. TOUT MANQUEMENT A CETTE REGLE CONSTITUE UN ABUS EVIDENT ET EXPOSE SON AUTEUR AU VERSEMENT DE DOMMAGES ET INTERETS. TOUS DROITS DE PROPRIETE INDUSTRIELLE RESERVES. NOTAMMENT EN MATIERE DE BREVETS ET DE MODELES.

NON E PERMESSO CONSEGNARE A TERZI O RIPRODURRE QUESTO DOCUMENTO, NE UTILIZZARNE IL CONTENUTO O RENDERLO COMUNQUE NOTO A TERZI SENZA AUTORIZZAZIONE ESPLICITA. OGNI INFRAZIONE COSTITUIRA UN EVIDENTE ABUSO E COMPORTERA IL RISARCIMENTO DEI DANNI SUBITI. E' FATTA RISERVA DI TUTTI I DIRITTI DERIVANTI DA BREVETTI O MODELLI.

COPYING OF THIS DOCUMENT AND GIVING IT TO OTHERS AND THE USE OR COMMUNICATION OF THE CONTENTS THEREOF, ARE FORBIDDEN WITHOUT EXPRESS AUTHORITY. CONTRAVENTION OF THIS RESTRICTION WILL CONSTITUTE AN EVIDENT ABUSE AND RESULT IN A LIABILITY TO THE PAYMENT OF DAMAGES. ALL RIGHTS ARE RESERVED IN THE EVENT OF THE GRANT OF PATENT OR REGISTRATION OF A UTILITY MODEL OR DESIGN. THIS DOCUMENT IS THE SUBJECT OF COPYRIGHT.

WEITERGABE SOWIE VERVIELFAELTIGUNG DIESER UNTERLAGE, VERWERTUNG UND MITTEILUNG IHRES INHALTS NICHT GESTATTET, SOWEIT NICHT AUSDRUECKLICH ZUGESTANDEN. ZUWIDERHANDLUNGEN STELLEN EINEN OFFENSICHTLICHEN MISSBRAUCH DAR UND VERPFLICHTEN ZU SCHADENERSATZ. ALLE RECHTE FUER DEN FALL DER PATENTERTEILUNG ODER GEBRAUCHSMUSTER-EINTRAGUNG VORBEHALTEN.