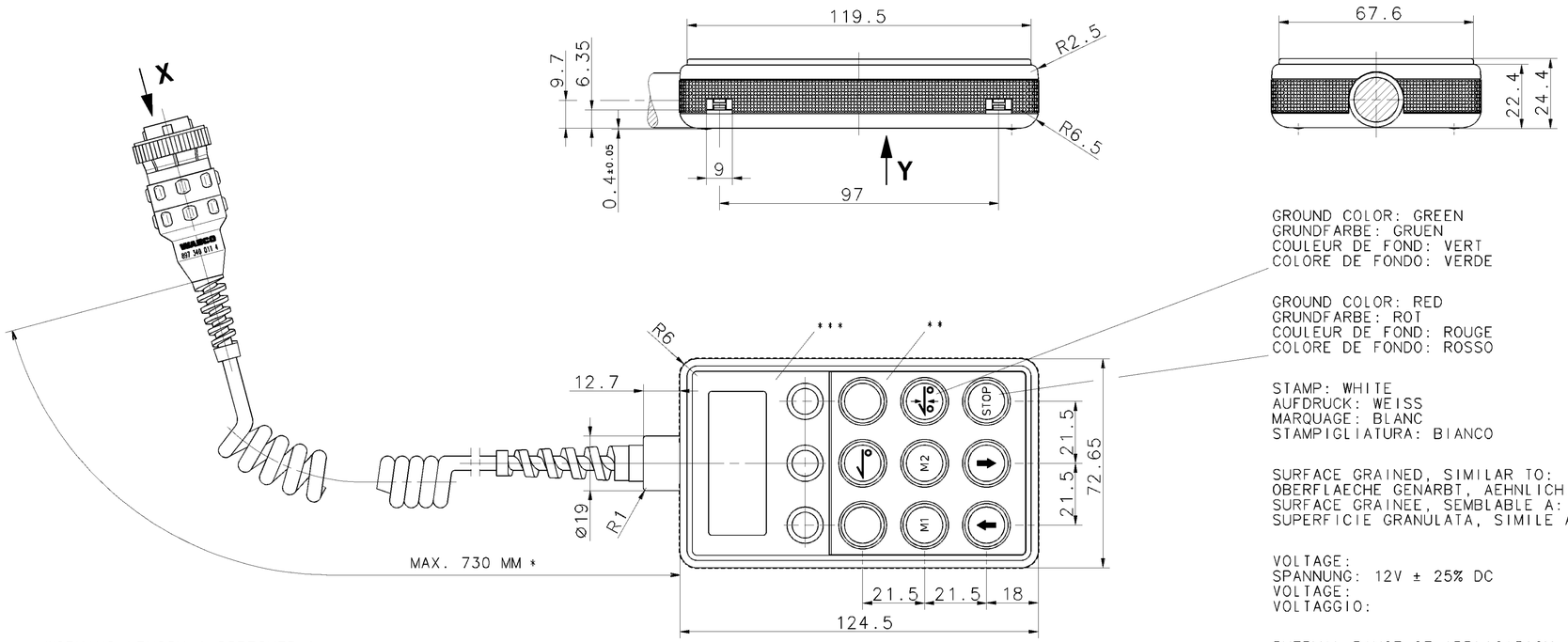

GROUND COLOR: GREEN
GRUNDFARBE: GRUEN
COULEUR DE FOND: VERT
COLORE DE FONDO: VERDE

GROUND COLOR: RED
GRUNDFARBE: ROT
COULEUR DE FOND: ROUGE
COLORE DE FONDO: ROSSO

STAMP: WHITE
AUFDRUCK: WEISS
MARQUAGE: BLANC
STAMPIGLIATURA: BIANCO

SURFACE GRAINED, SIMILAR TO:
OBERFLAECHE GENARBT, AEHNLICH: JED-533-035 (VDI 3400 REF. 24) **
SURFACE GRAINEE, SEMBLABLE A: JED-533-038 (VDI 3400 REF. 33) ***
SUPERFICIE GRANULATA, SIMILE A:

VOLTAGE:
SPANNUNG: 12V ± 25% DC
VOLTAGE:
VOLTAGGIO:

THERMAL RANGE OF APPLICATION:
THERMISCHER ANWENDUNGSBEREICH -40°C...+70°C
PLAGE DE TEMPERATURE EN UTILISATION:
CAMPO TERMICO DI APPLICAZIONE:

TYPE OF PROTECTION: EXCEPT CONNECTOR
SCHUTZART: IP 64 AUSSER STECKER
MODE DE PROTECTION: SAUF CONNECTEUR
TIPO DI PROTEZIONE: ECCETTO CONNETTORE

FURTHER TECHNICAL DATA SEE PRODUCT SPECIFICATION
WEITERE TECHNISCHE DATEN SIEHE PRODUKTSPEZIFIKATION
POUR AUTRES DONNEES TECHNIQUES VOIR PRODUCT SPECIFICATION
PER ULTERIORI DATI TECHNICI VERDERE SPECIFICA DI PRODOTTO

WORKING LENGTH (STRECKED)
* ARBEITSLAENGE (GESTRECKT) MAX. 2000 MM
LONGEUREDE TRAVAIL (CONNECTE)
LUNGHEZZA DI LAVARO (STESO)

DATE OF MANUFACTURE:
HERSTELLDATUM: JED-226
DATE DE FABRICATION:
DATA DI FABRICAZIONE:

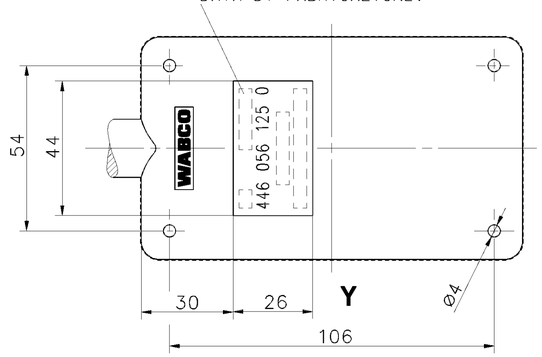

X
2:1

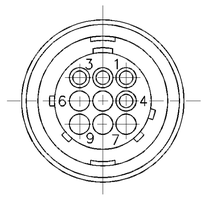

1	+UB	KL.15
2	GROUND MASSE	KL.31
3	CLOCK TAKT	
4	DATA DATEN	

GENERAL SPECIFICATION: JED-334			
FURTHER TECHNICAL DATA:			
DOC. CODE:	SHEET: TO		
GENERAL TOLERANCES			
CLASS 1)	RANGE OF NOMINAL DIMENSIONS (± mm) ≤50	> 50 ≤180	>180 ≤400	>400
FINE	0,5	1,0	1,5	2,0
MEDIUM #	1,0	2,0	3,0	4,0 ± 3°
COARSE	2,0	3,5	5,0	6,5
TAPPED HOLES ACC. ISO 4039 / JED-152				
1) TOLERANCE CLASS APPLIED CROSSMARKED				

DCN-NO.	REV.	DATE
084309	1xA	02-11-08

CADAM-DRAWING COPYRIGHT		
DATE	SIGNATURE	
DRAWN: 02-03-07	PFENNIG	
CHECKED: 02-03-07	MEHNERT	
STANDARDIZATION:		

WABCO

CONTROL ELEMENT
BEDIENEINHEIT
ELEMENT DE COMMANDE
ELEMENTO DI COMANDO

MASS	SCALE	PRODUCT IDENTIFICATION NO.	DOC. CODE	SHEET
0.30 KG	1:1 2:1	446 056 125 0	605	1/1
SIZE A 1	I.R.I. 142		SHAPE CODE	REPLACEMENT FOR

100mm

EXPERT CODE 0 5 0

PRODUCT TYPE

V000/016/3/04.93

605/653

VOUS COMMUNICATION OU REPRODUCTION DE CE DOCUMENT, TOUTE EXPLOITATION OU COMMUNICATION DE SON CONTENU OU REMISE A DES TIERS SONT INTERDITES SAUF AUTORISATION ECRITE. TOUS DROITS DE PROPRIETE INTELLECTUELLE RESERVES.
NON E PERMESSO CONSEGNARE A TERZI O RIPRODURRE QUESTO DOCUMENTO, NE UTILIZZARNE IL CONTENUTO O RENDERLO ACCESSIBILE A TERZI SENZA AUTORIZZAZIONE SCRITTA. TUTTI I DIRITTI DI PROPRIETA' INTELLETTUALE RISERVATI.
WEITERGABE SOWIE VERVIELFAELTIGUNG DIESER UNTERLAGE, VERWERTUNG UND MITTEILUNG IHRES INHALTS NICHT GESTATTET, SOWEIT NICHT AUSDRUECKLICH ZUGESTANDEN. ZUWIDERHANDLUNGEN VERPFLICHTEN ZU SCHADENSERSATZ. ALLE RECHTE FUER DEN FALL DER PATENTERTEILUNG ODER EINTRAGUNG VORBEHALTEN.
COPYING OF THIS DOCUMENT AND GIVING IT TO OTHERS AND THE USE OR COMMUNICATION OF THE CONTENTS THEREOF, ARE FORBIDDEN. THIS DOCUMENT IS SUBJECT TO COPYRIGHT. ALL RIGHTS RESERVED IN THE EVENT OF THE GRANT OF PATENT OR REGISTRATION OF A UTILITY MODEL OR DESIGN.